YAMAHA

Electone ORGAN

BK-7 Series

SERVICE MANUAL

NIPPON GAKKI CO., LTD.
Hamamatsu, Japan
SINCE 1887

INTRODUCTION

This manual contains service information for the Electone BK-7, BK-7I and BK-7S.

These models are the fully transistorized organ using silicon (NPN Type) transistors. Take special care as to the following points before making any service :

1) Check the main voltage and cycles of the organ and ascertain if they are correctly adjusted to the electric power supply in the area where the organ is used.
If higher voltage is applied to the organ by mistake, transistors will be inevitably distroyed.

2) Correct voltage and polarity should be observed when using a tester in order to avoid damage to transistors and FETs.

3) Turn the organ off during diassembly and parts replacement.
Reckeck all work before applying power. Transistors are very unforgiving and destruction is immediate!

CONTENTS

SPECIFICATIONS

KEYBOARDS

Upper Manual	44 keys (3-2/3 octaves)	f ∿c_4
Lower Manual	44 keys (3-2/3 octaves)	F ∿c_3
Pedals	13 keys (1 octave)	C_1 ∿C

TONE LEVERS

Upper Manual	Flute	16′
	Flute	8′
	Flute	4′
	Trombone	16′
	Brass	8′
	String	8′
Lower Manual	Flute	8′
	Horn	8′
	Cello	8′
Pedals	Bass	16′
	Bass Guitar	

PRESET TONE SELECTORS (UPPER)

Piano
Hawaiian Guitar

EFFECT LEVERS

Vibrato	
Percussive 4′	(Upper)
Percussive Length	(Upper)
Attack Wah-Wah	(Upper)
Repeat Speed	(Upper)
Pedal Sustain	

EFFECT CONTROLS

Brilliance
Reverb
Manual Balance (Upper/Lower)

EFFECT SELECTOR

Glide (Foot control)

TREMOLO SELECTORS

Voice (Main/Rotary)
Ensemble
Tremolo
Chorus

AUTO RHYTHM SECTION

Rhythm Selectors

March	Jazz Rock
Waltz	Rhumba
Swing	Bossanova
Slow Rock	Samba

Rhythm Controls
- Rhythm Start
- Synchro-Start
- Rhythm Stop (Foot control)
- Tempo
- Volume
- Tone Balance

Tempo Indicator Lamp

AUTO ACCOMPANIMENT SECTION

Auto Bass/Chord Lever
Bass Variation Selectors
- 1 · 5
- 1 · 3 · 5
- 1 · 7 · 5

OTHER CONTROLS

Master Volume
Expression Pedal
Foot Effect Switch
Tremolo Speed Control
Power Switch

OTHER FITTINGS

Headphone Jack
External Input Jack
Pilot Lamp
Roll-top Fallboard
Music Rest
Matching Bench with Music Storage Space

NATURAL SOUND SPEAKERS

Main:	JA-5101	59 x 48cm (23¼ x 14½″)
Rotary:	JA-1701A	16 x 23cm (6½ x 9″)

Electro-control 2-speed

CIRCUITRY

Solid State (Incl. ICs and FETs)
Main Amplifier: OCL System
Output Power: 30 Watts (RMS)
Power Consumption: 120 Watts
Power Source: 100/110/117/125/220/240V AC 50/60Hz

DIMENSIONS

Width:	112cm (44″)
Depth:	56cm (22″)
Height:	90cm (35½″)

WEIGHT

BK-7:	58kg (128 lbs.)
BK-7I, BK-7S:	60kg (132 lbs.)

FINISH

BK-7, BK-7I:	Natural American walnut, oil finish
BK-7S:	Antique oak, oil finish

Specifications subject to change without notice.

CODING GUIDE

WIRING FOR EXPLANTION PURPOSES.

CIRCUIT BOARD AND WIRING

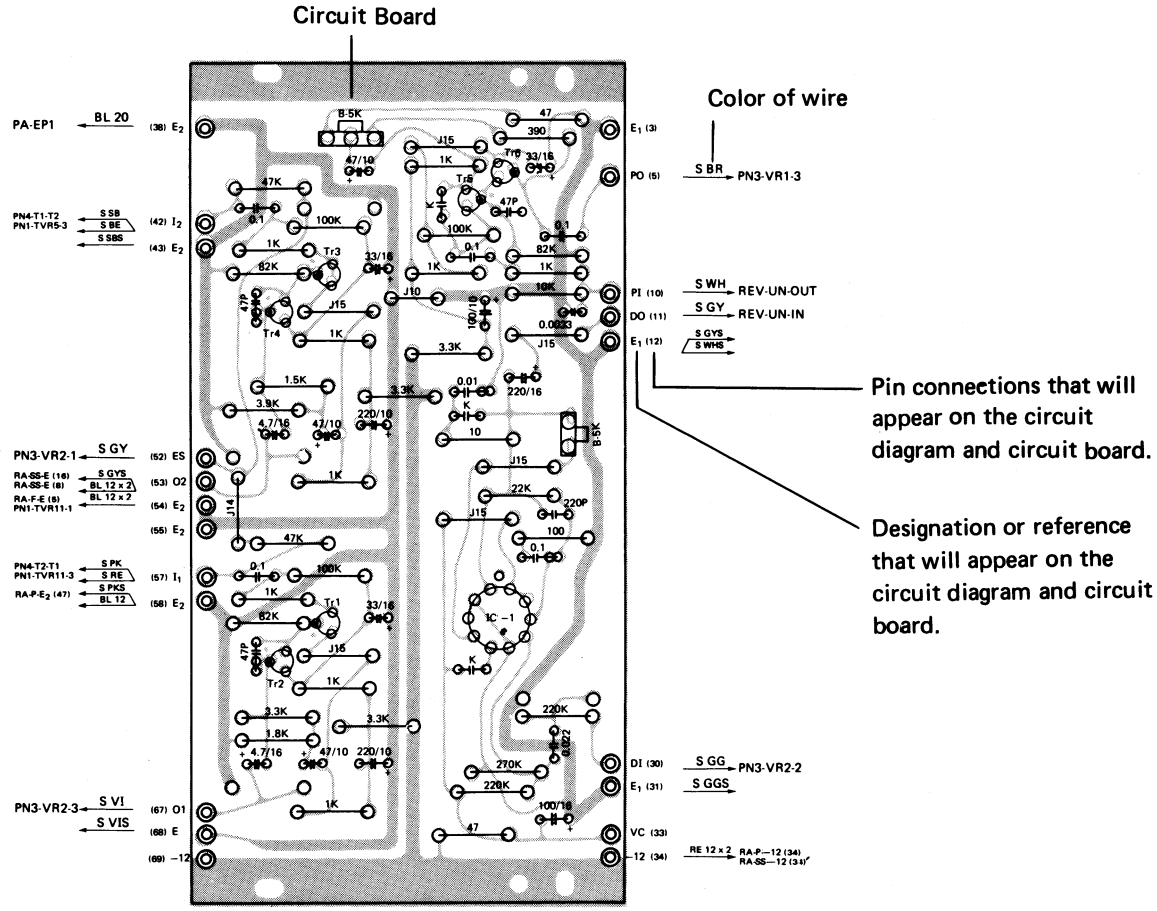

This coding states that a green wire is connected to pin 20, which is point E of the M circuit board. The other end of the wire is connected to pin 54, which is point E5 of the D circuit board, physically located on the Rack.

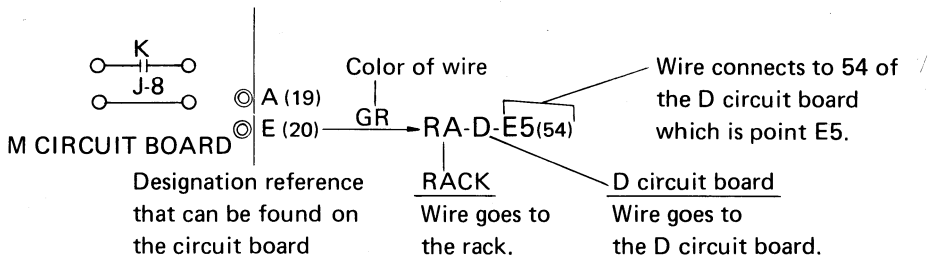

NOTE: ABBREVIATIONS OF WIRE COLOR IN ELECTONE

BL ..... BLACK	BR ..... BROWN	RE ..... RED	OR ..... ORANGE
YE ..... YELLOW	GR ..... GREEN	BE ..... BLUE	VI ..... VIOLET
GY ..... GRAY	WH ..... WHITE	GG ..... GRASS GREEN	SB ..... SKY BLUE
PK ..... PINK	TR ..... TRANSPARENT	TP ..... TIN PLATED WIRE	

ASSEMBLY LAYOUT

TOP VIEW

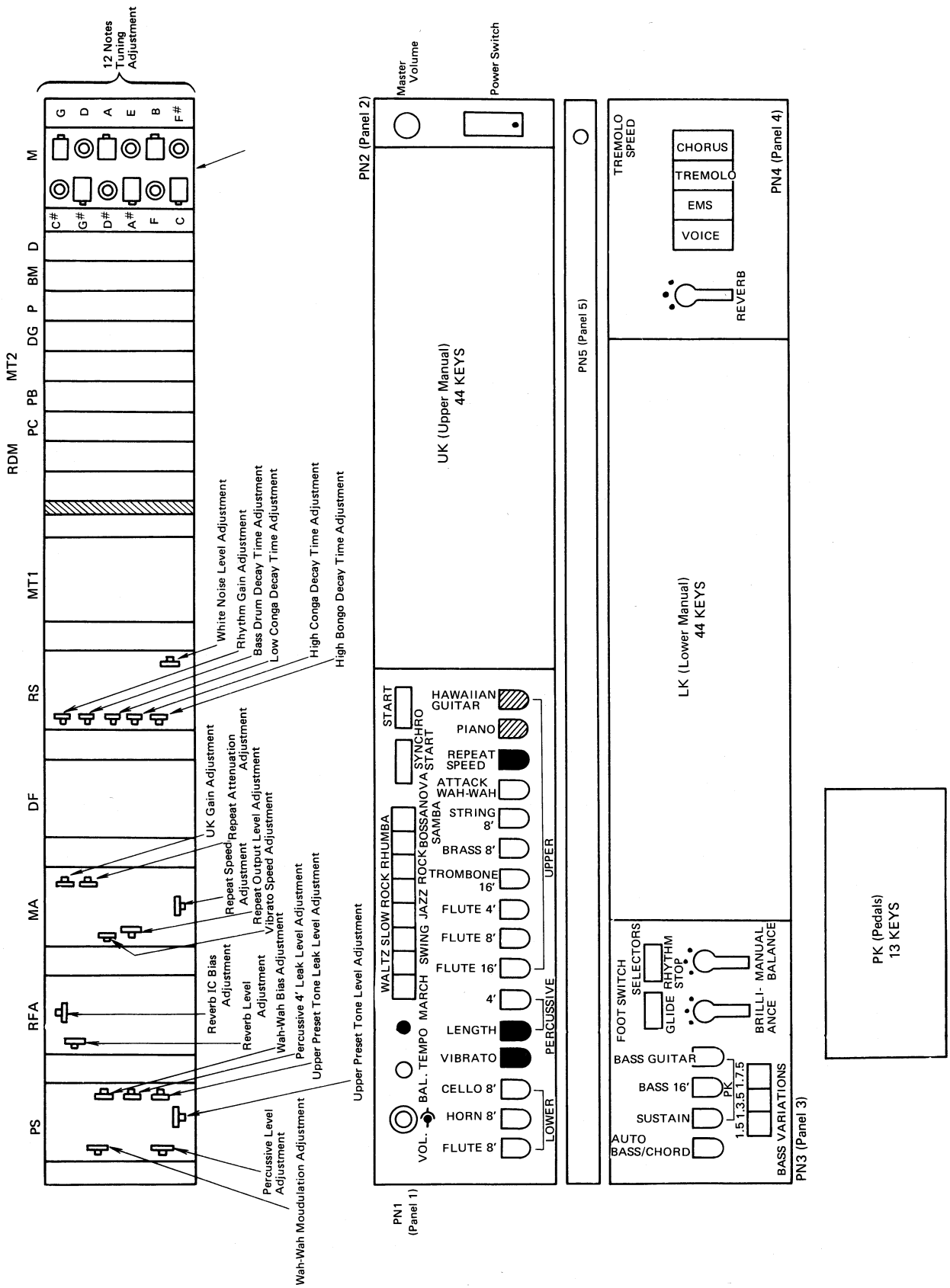

ASSEMBLY LAYOUT

BACK VIEW

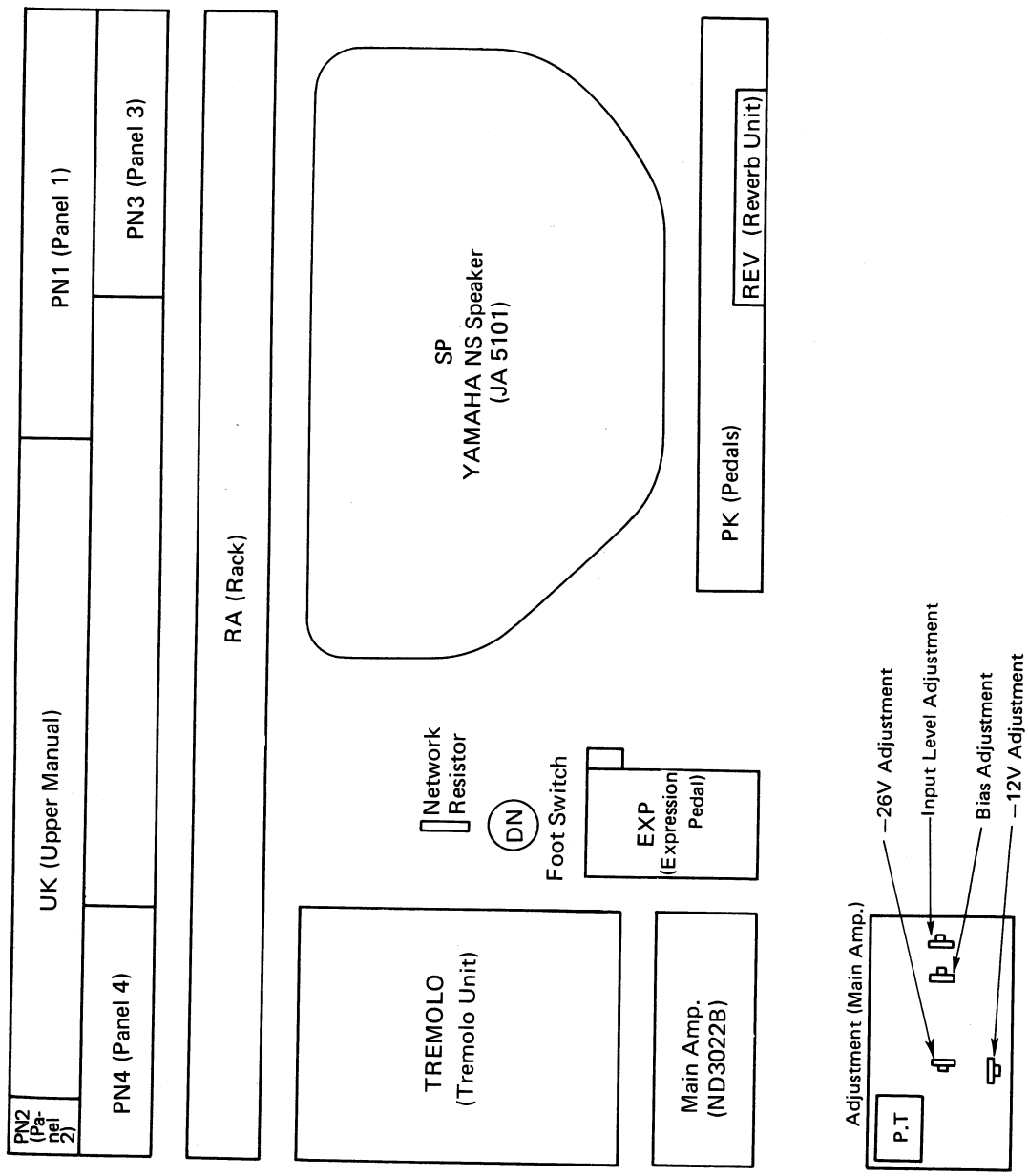

BLOCK DIAGRAM

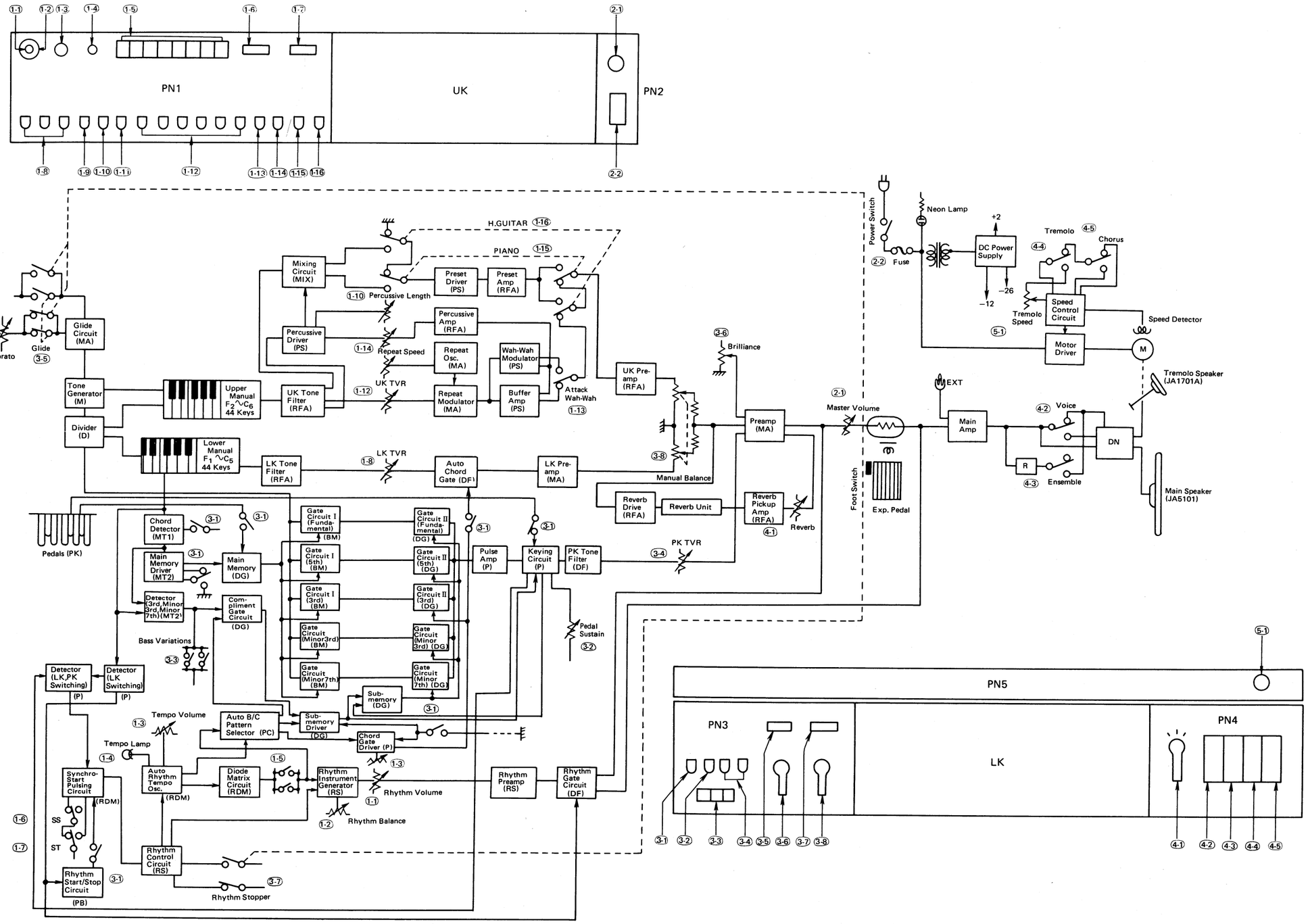

BLOCK DIAGRAM

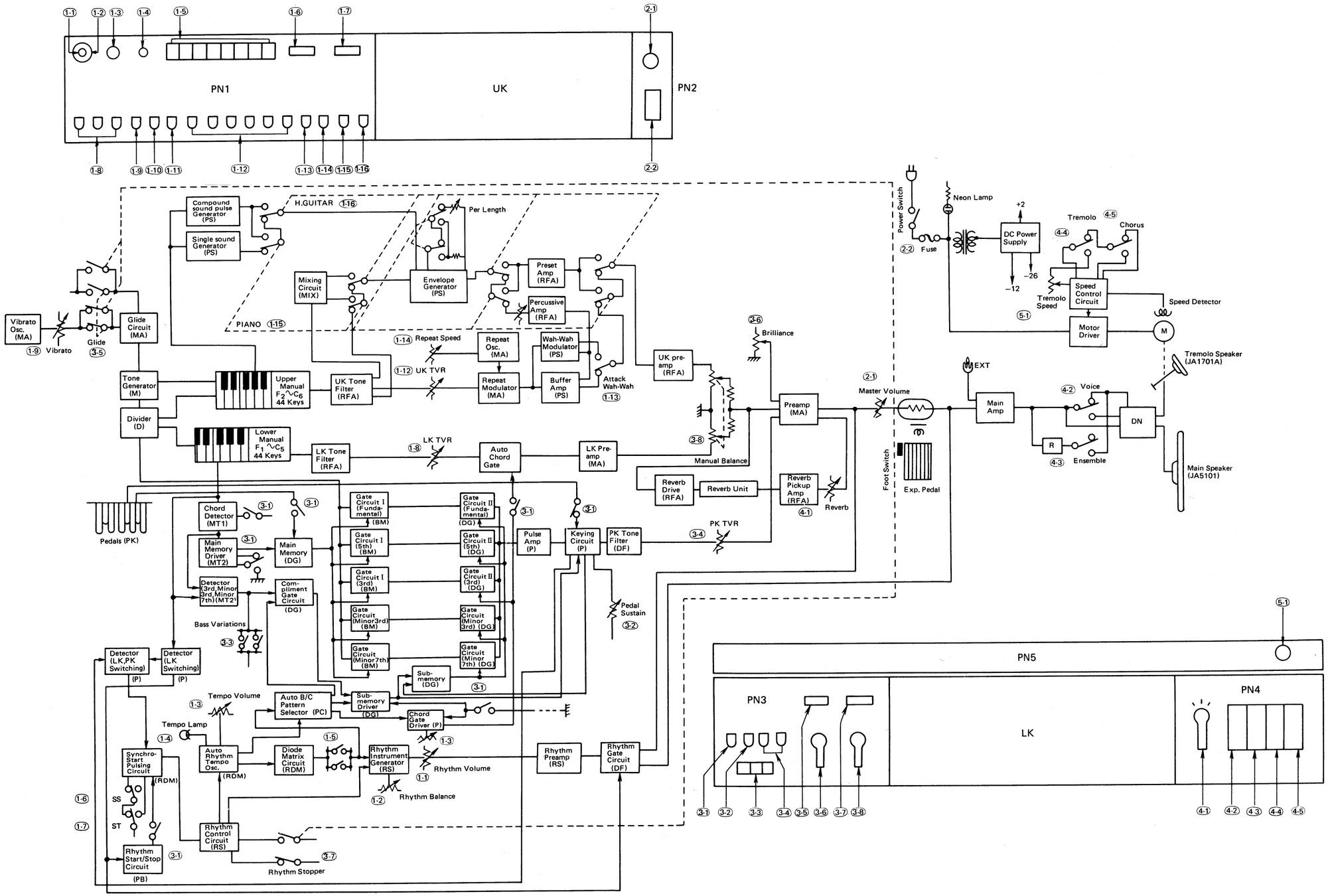

KEC-2579-3Z

CIRCUIT DESCRIPTION

No.	Circuit Board	Mounted Circuits	Remarks
1	M	oscillating circuits	
2	D	frequency divider	
3	BM	Auto Bass/Chord gate circuit (fundamental, 3rd, minor 3rd, 5th, minor 7th)	
4	P	pulse amp./divider keying drive circuit bass 16' keying circuits bass guitar keying circuits LK keying detector chord gate drive circuit	
5	DG	Auto Bass/Chord main memory circuit compliment gate drive circuit	
6	MT2	Auto Bass/Chord matrix circuit (3rd, minor 3rd, minor 7th detecting) main memory drive circuit	
7	PB	signal amp. 1/5 frequency divider keying circuit pulse amp. indirect gate circuit ripple filter	
8	PC	Auto Bass/Chord pattern detector	
9	RDM	Auto Rhythm rhythm starting circuit clock pulse generator counting circuit diode matrix circuit inverter circuit	
10	MT1	Auto Bass/Chord matrix circuit (chord detector)	
11	RS	Auto Rhythm synchro-starting amp. tempo lamp driving amp. rhythm stopping circuit rhythm instrument generator rhythm preamp.	
12	DF	auto chord gate circuit auto rhythm gate circuit pedal tone filter sub-memory drive circuit bass start synchronizing circuit	
13	MA	repeat modulator LK preamp. general preamp. vibrato oscillating circuit repeat oscillating circuit vibrato amp. glide circuit	
14	RFA	reverb drive circuit reverb pickup circuit UK/LK tone filter UK preamp. percussive amp. preset tone amp.	
15	PS	percussive 4', 2-2/3' circuit wah-wah modulator buffer amp.	

M CIRCUIT DIAGRAM

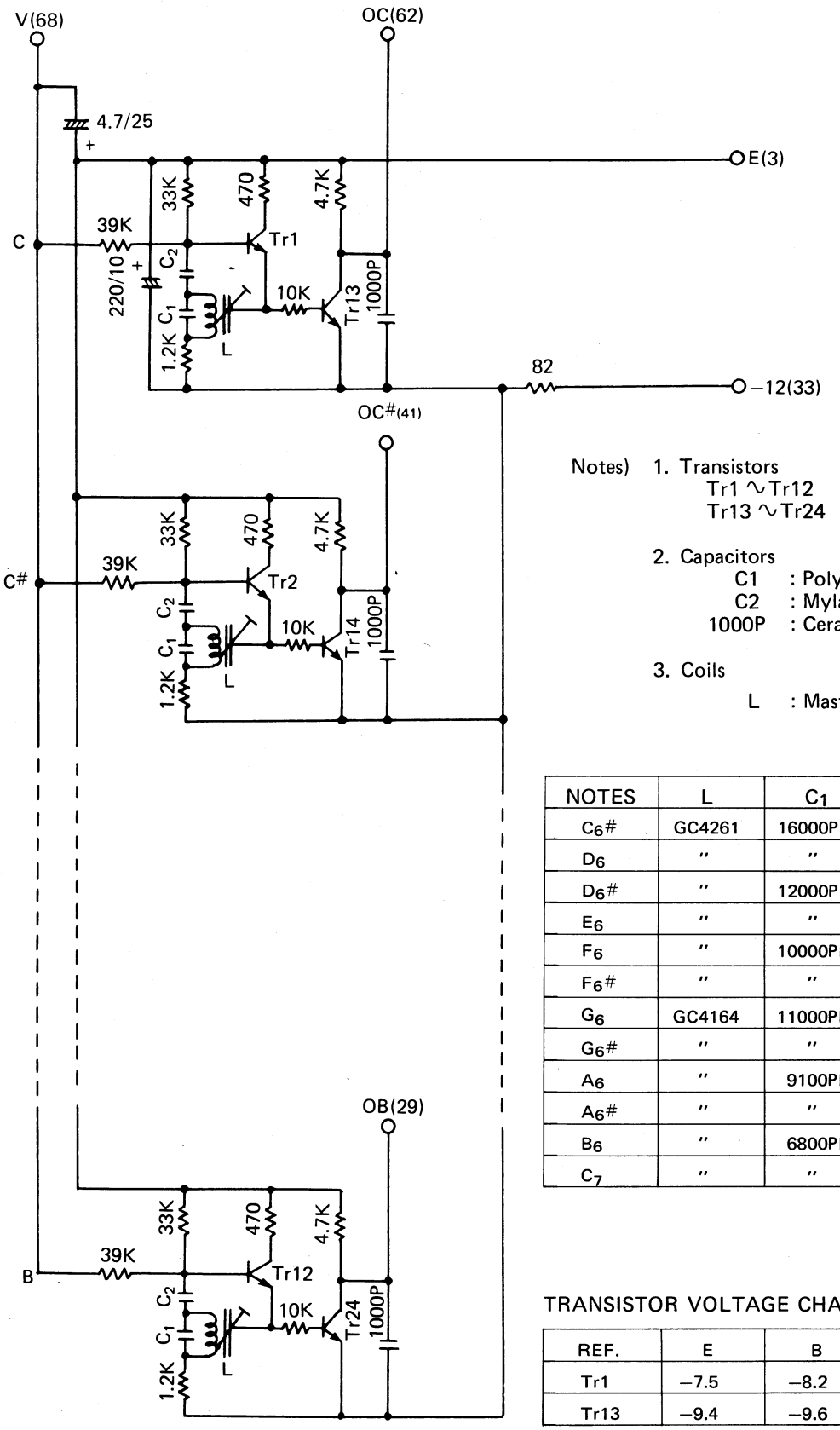

Notes) 1. Transistors
Tr1 ∿ Tr12 : 2SC458L(A) or (B)
Tr13 ∿ Tr24 : 2SC458L(B)

2. Capacitors
C1 : Polystyrene Capacitor ± 5%
C2 : Mylar Capacitor ± 5%
1000P : Ceramic Capacitor ± 10%

3. Coils
L : Master Coil GC4164/4261

NOTES	L	C_1	C_2
C_6#	GC4261	16000PF	0.022μF
D_6	"	"	"
D_6#	"	12000PF	0.02μF
E_6	"	"	"
F_6	"	10000PF	0.018μF
F_6#	"	"	"
G_6	GC4164	11000PF	0.016μF
G_6#	"	"	"
A_6	"	9100PF	0.013μF
A_6#	"	"	"
B_6	"	6800PF	0.012μF
C_7	"	"	"

TRANSISTOR VOLTAGE CHART

REF.	E	B	C
Tr1	−7.5	−8.2	−0.6
Tr13	−9.4	−9.6	−4.8

M CIRCUIT BOARD AND WIRING

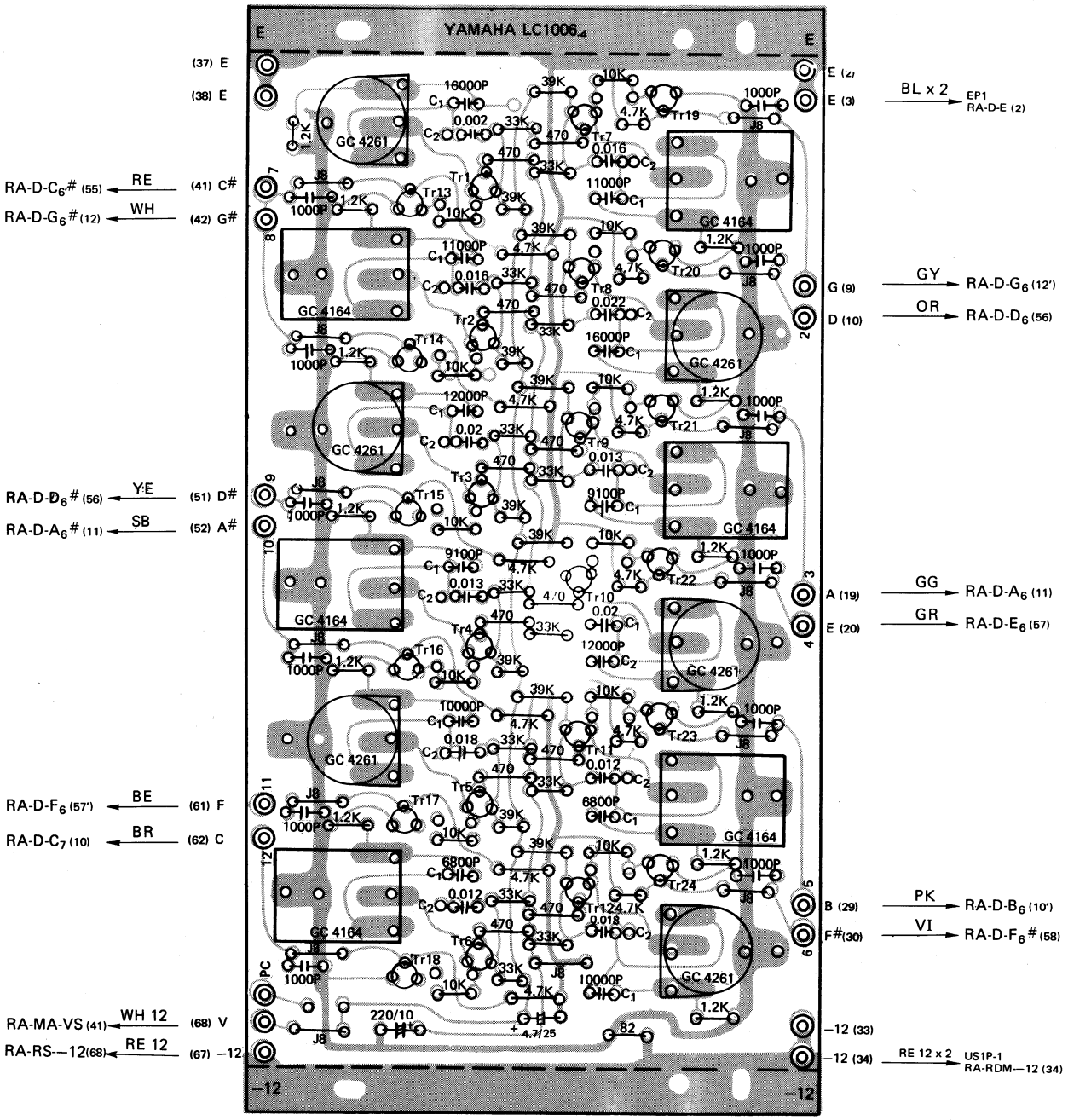

D CIRCUIT DIAGRAM

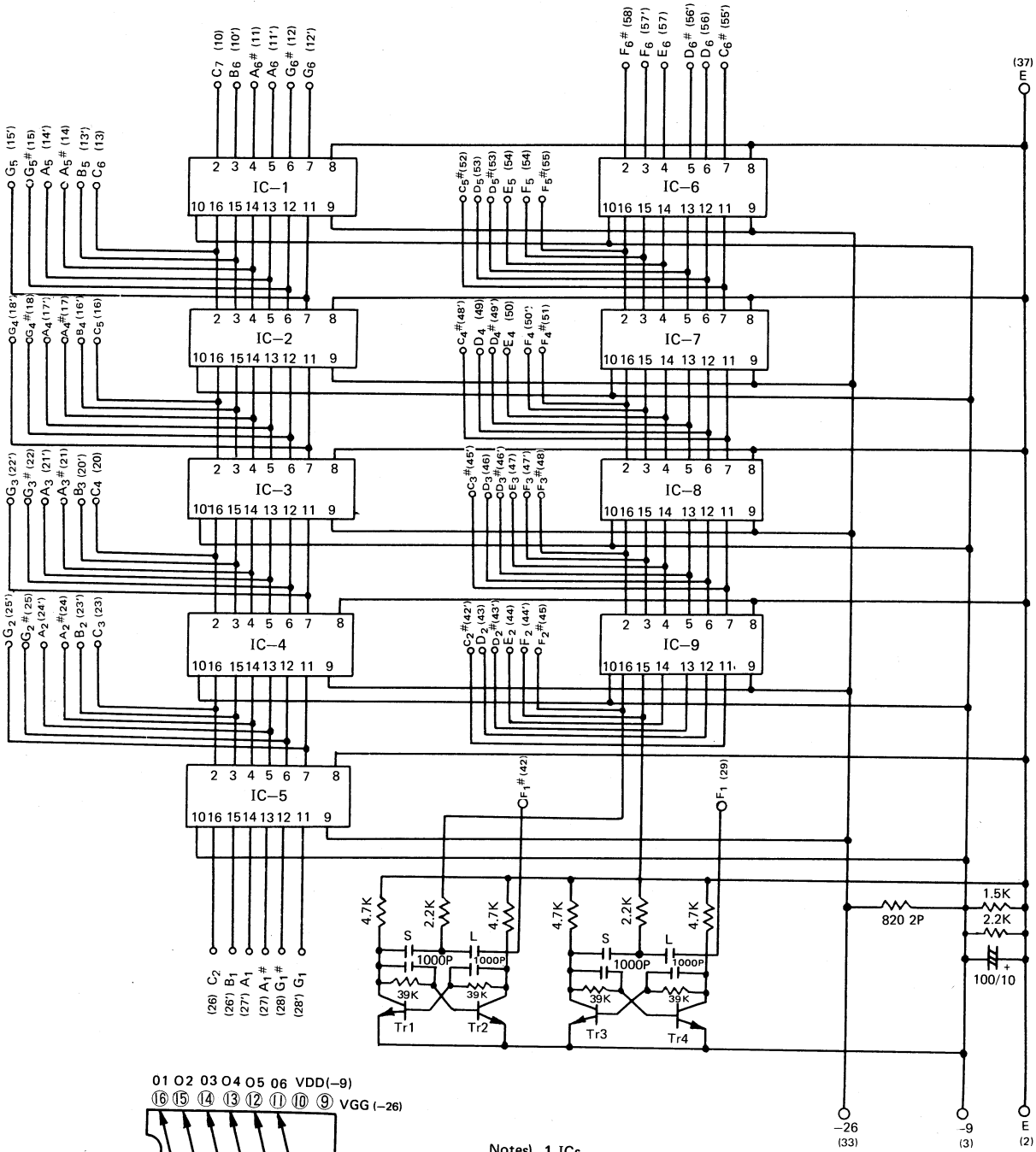

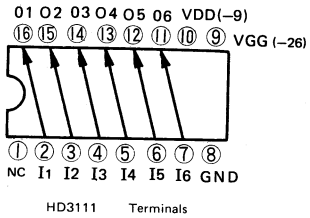

Notes) 1. ICs
IC-1 ∿IC-7 : Integrated Circuit HD3111

2. Transistors
Tr1 ∿Tr4 : 2SC458L(A)

3. Capacitors
L : Ceramic Capacitor 1075 ∿1425pF
S : Ceramic Capacitor 675 ∿ 925pF
K : Ceramic Capacitor 875 ∿1150pF

D CIRCUIT BOARD AND WIRING

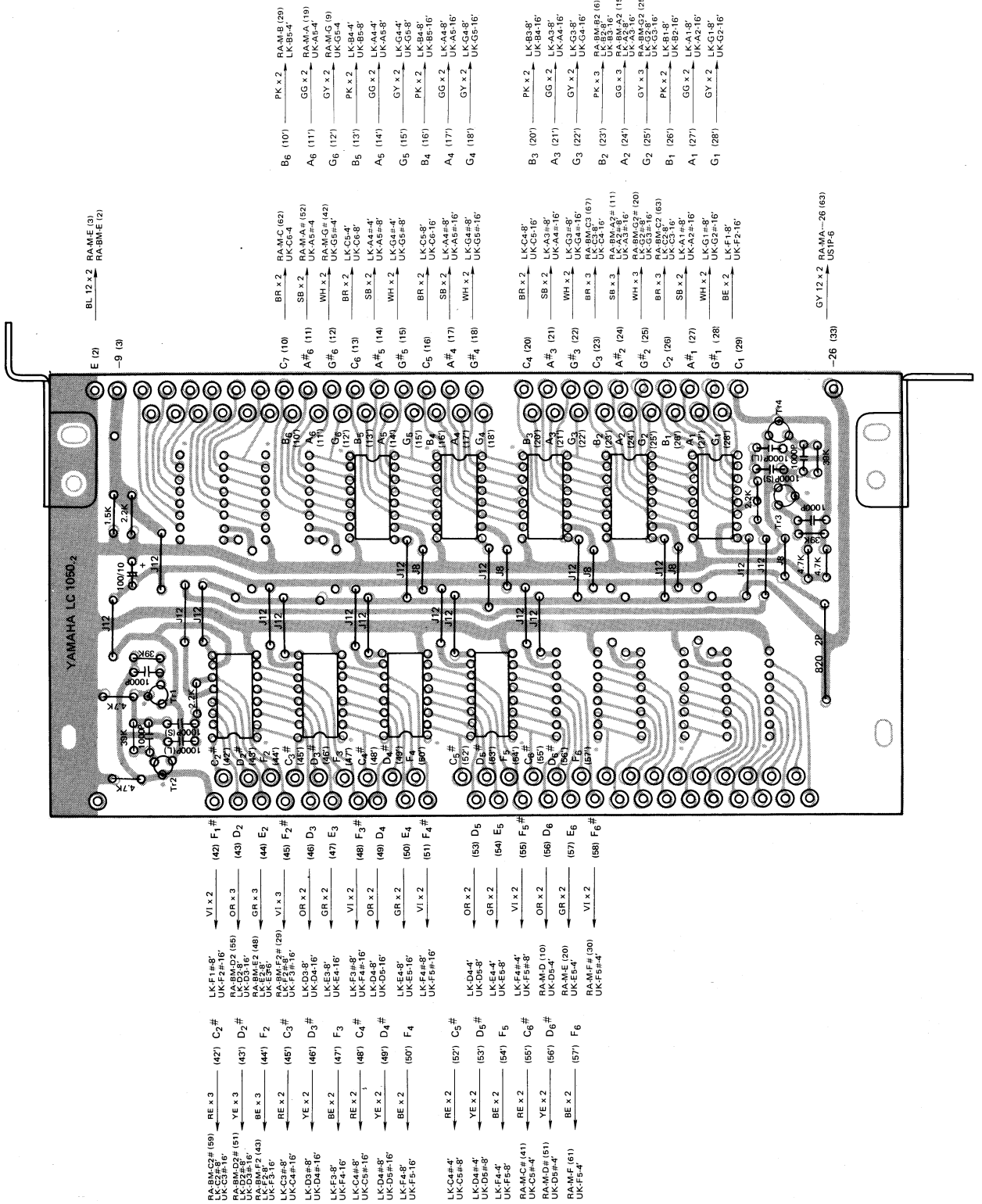

BM CIRCUIT DIAGRAM

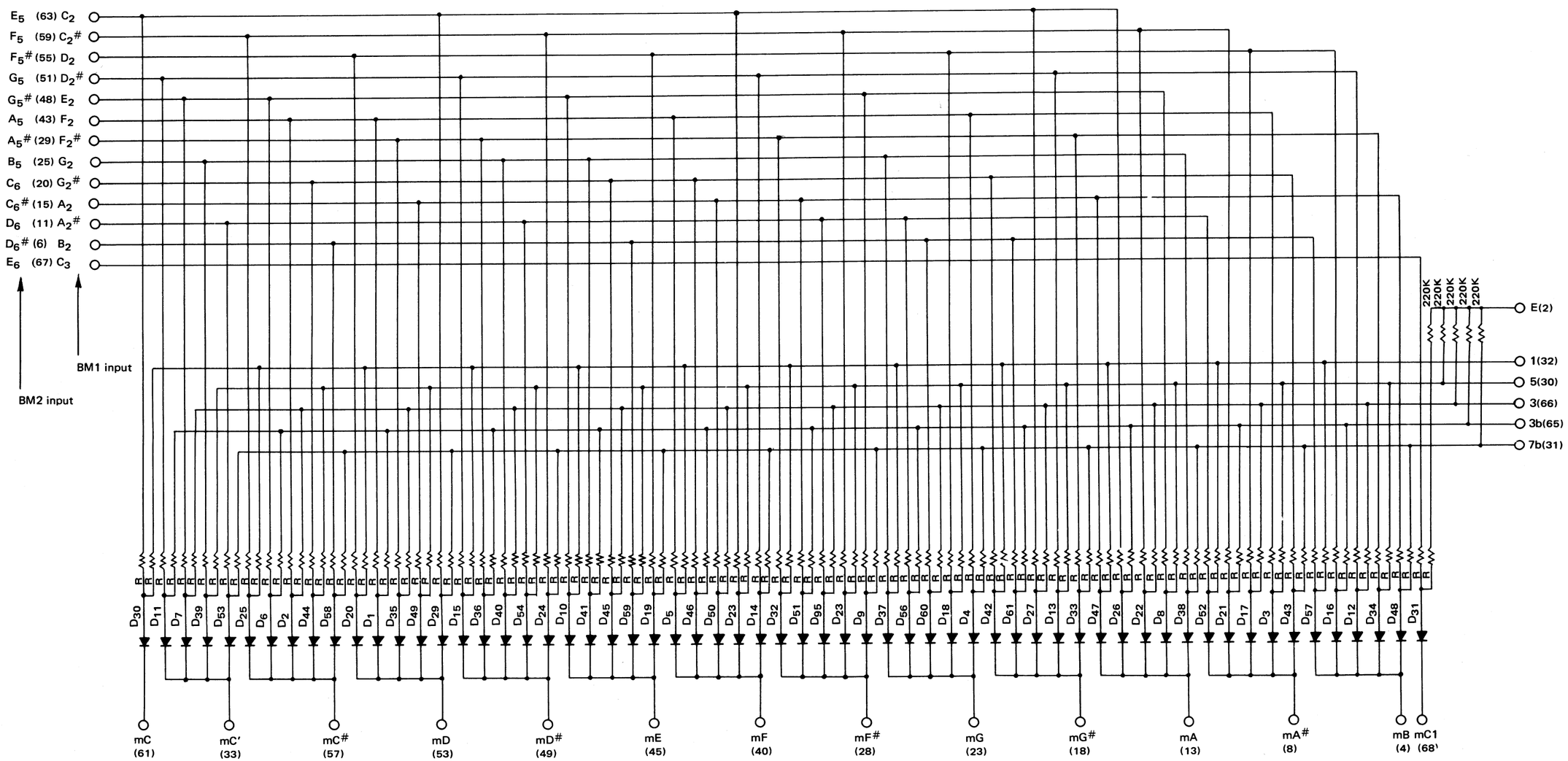

Notes) 1. Resistors
R : 470KΩ
2. Diodes
$D_1 \sim D_{61}$: 1S1555

BM CIRCUIT BOARD AND WIRING

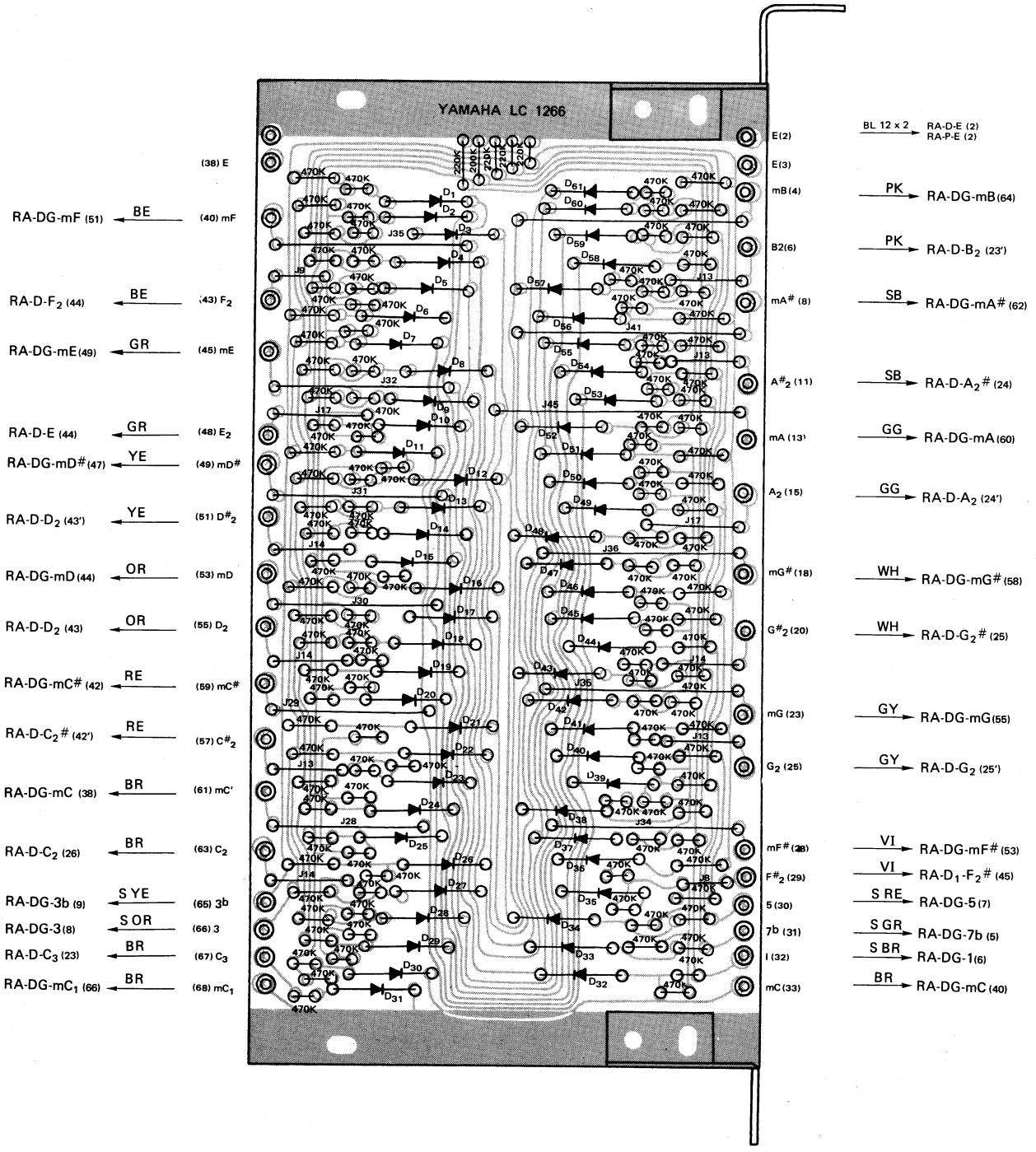

BK-7 (S/# 1001 ∿)
BK-7I (S/# 1001 ∿)
BK-7S (S/# 1001 ∿)

P CIRCUIT DIAGRAM

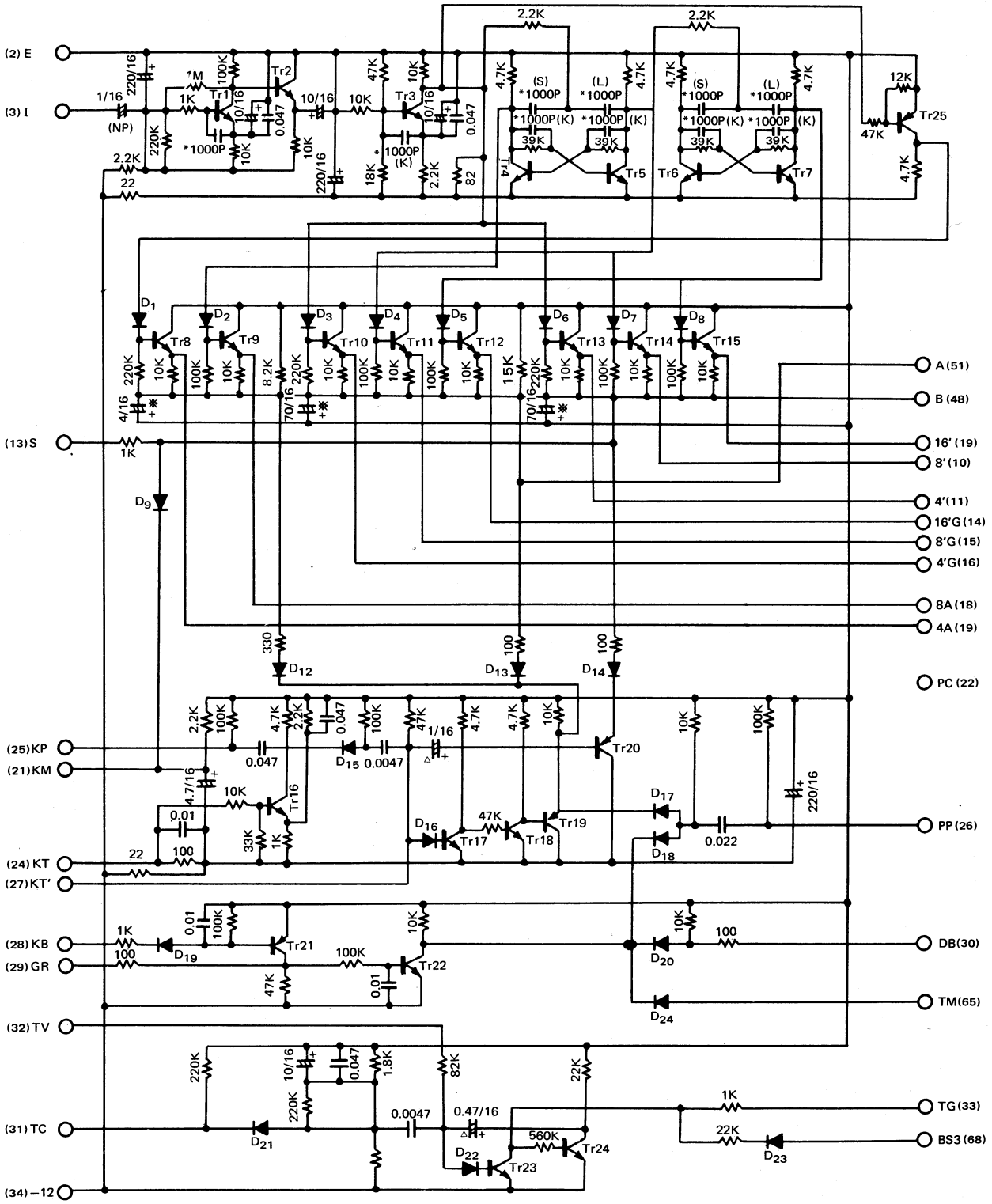

Notes) 1. Transistors
Tr1 ∿ Tr3, Tr8 ∿ Tr18, Tr22 ∿ Tr24 : 2SC458L(B) or (C), 2SC828Y(P) or (Q)
Tr4 ∿ Tr7 : 2SC458L(A), 2SC828Y(O)
Tr19 ∿ Tr21, Tr25 : 2SA561(Y)
2. Diodes
D : 1S1555
3. Capacitors
* : Ceramic Capacitor
△ : Solid Aluminum Capacitor
NP : Non-polar Electrolytic Capacitor

P CIRCUIT BOARD AND WIRING

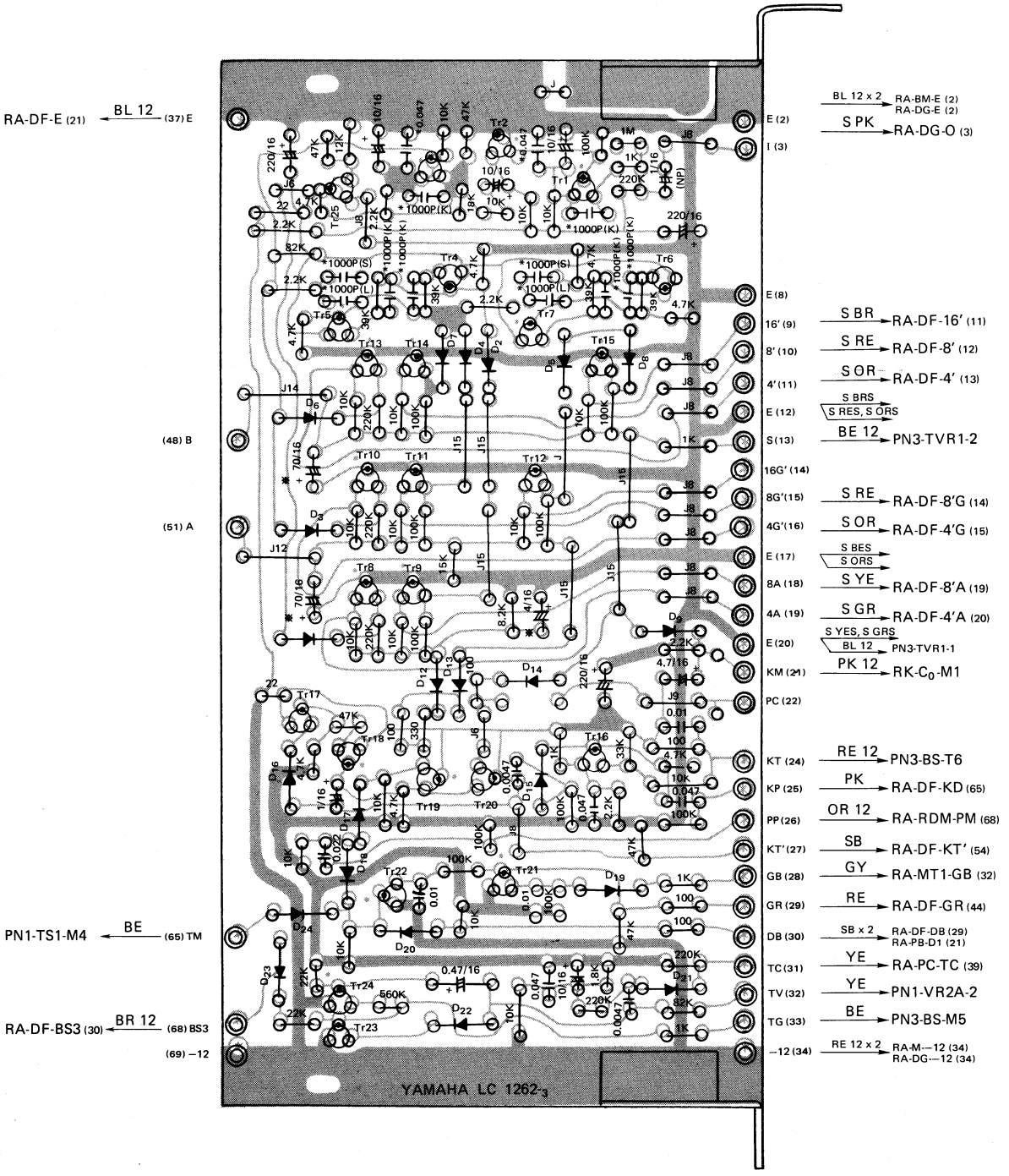

DG CIRCUIT DIAGRAM

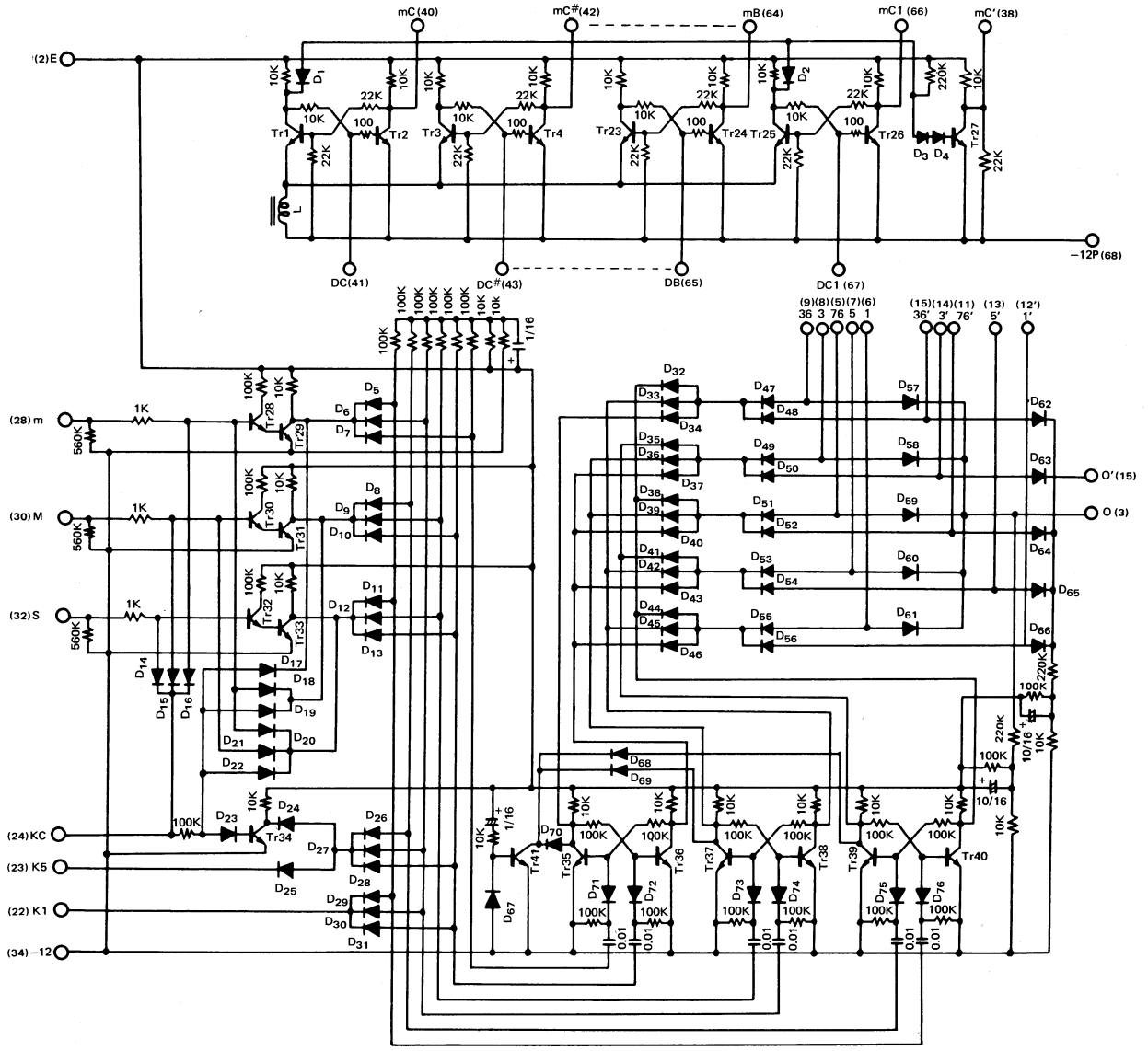

Notes) 1. Transistors
Tr1 ∿Tr40 : 2SC458L(B) or (C), 2SC828Y(P) or (Q)
2. Diodes
D : 1S1555
3. Coil
L : Choke Coil GA0096

DG CIRCUIT BOARD AND WIRING

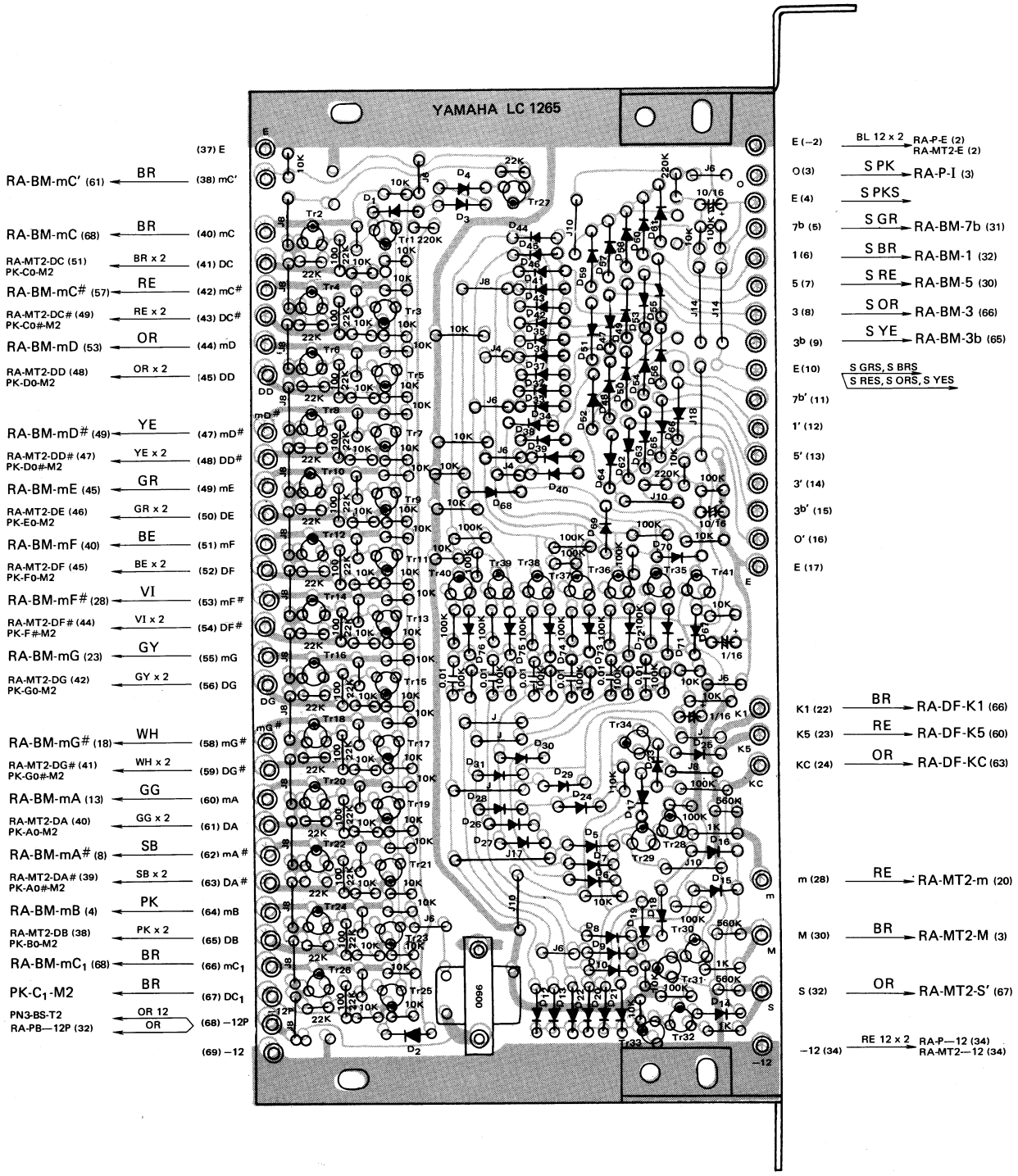

BK-7 (S/# 1001 ∿)
BK-7I (S/# 1001 ∿)
BK-7S (S/# 1001 ∿)

MT2 CIRCUIT DIAGRAM

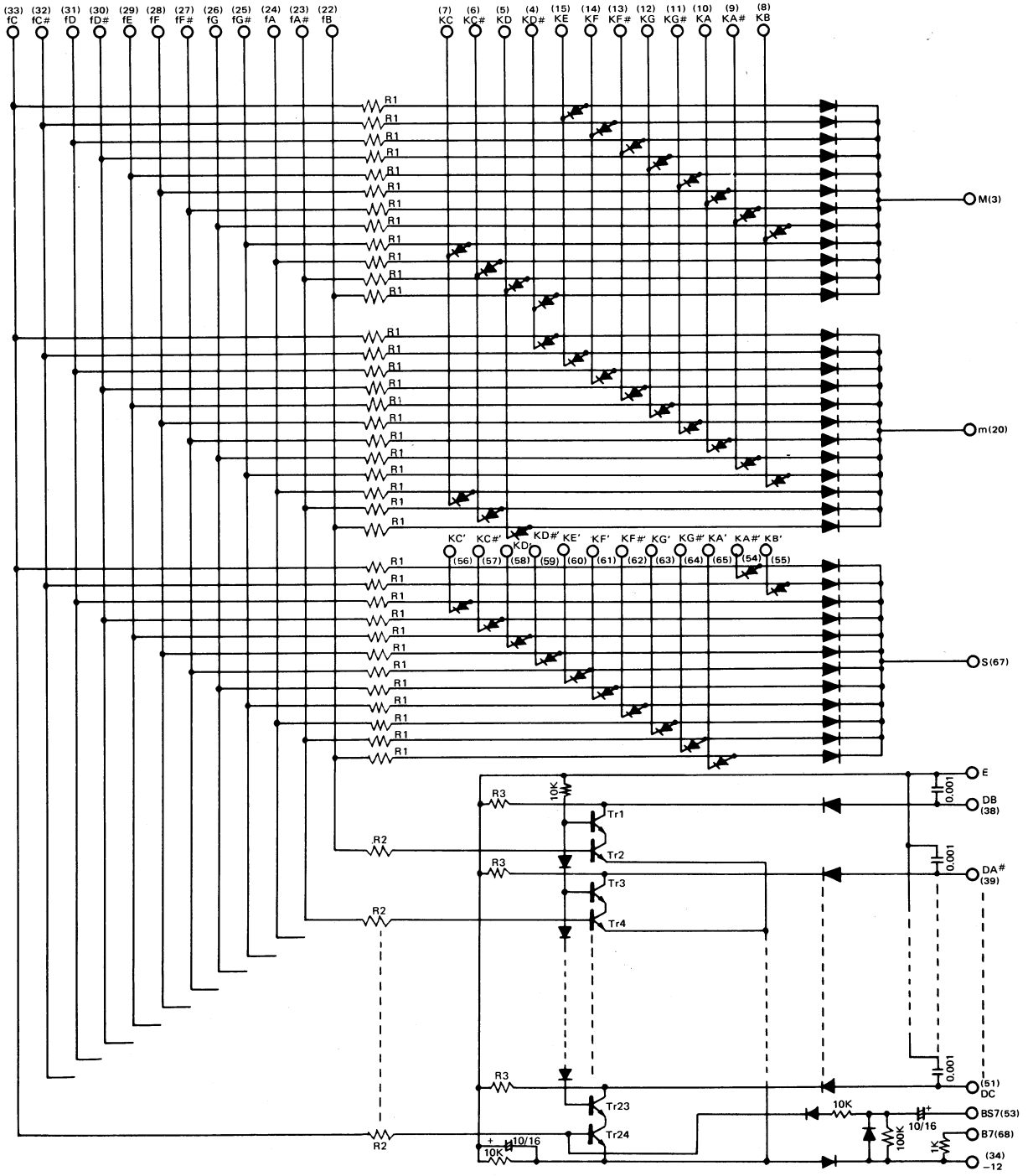

Notes) 1. Transistors
Tr1 ∿Tr24 : 2SC458L(B) or (C), 2SC828Y(P) or (Q)
2. Diodes
1S1555
3. Resistors
R1 : 560KΩ
R2 : 220KΩ
R3 : 22KΩ
4. Capacitors
Mylar Capacitor 0.01μF

MT2 CIRCUIT BOARD AND WIRING

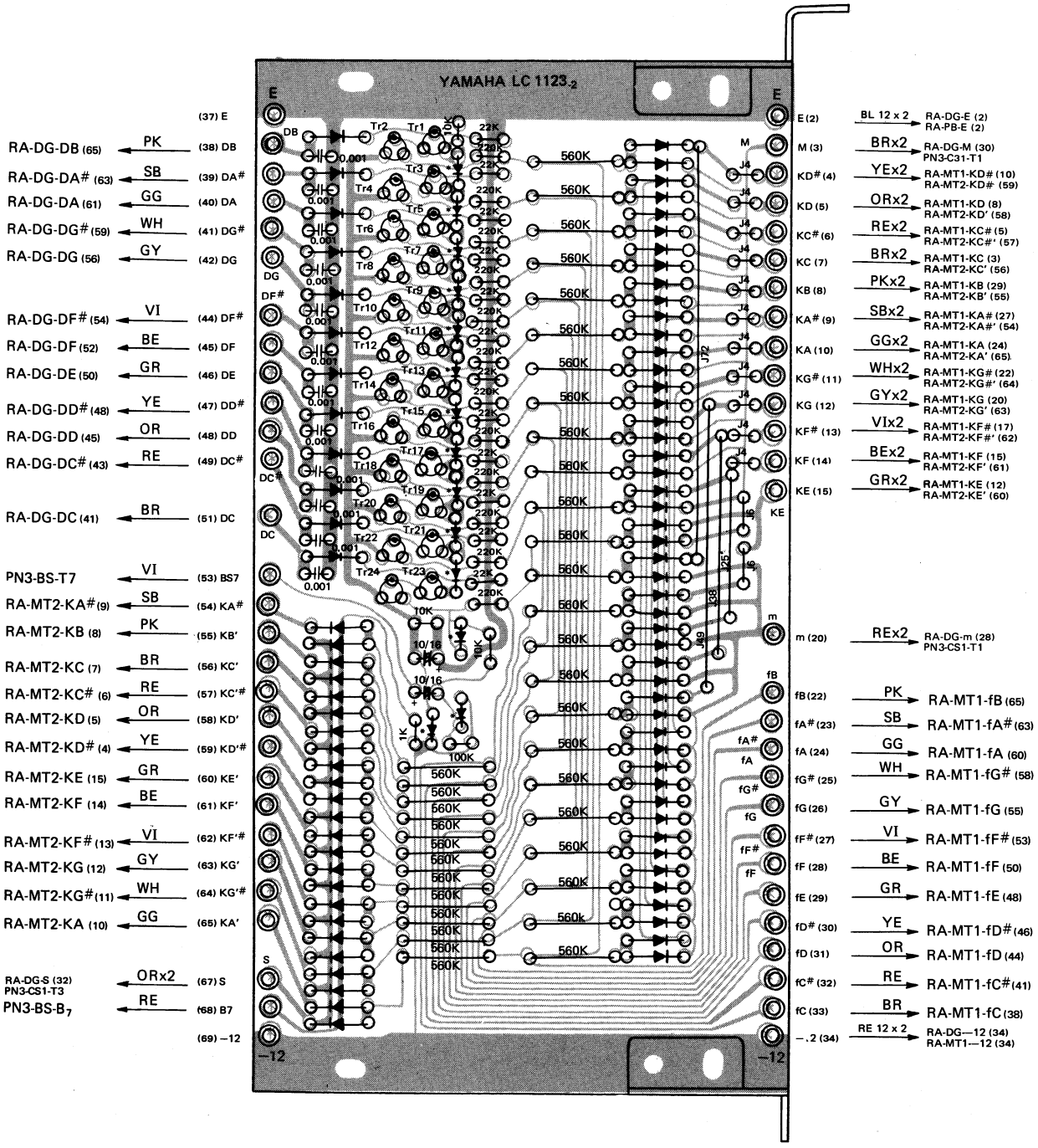

PB CIRCUIT DIAGRAM

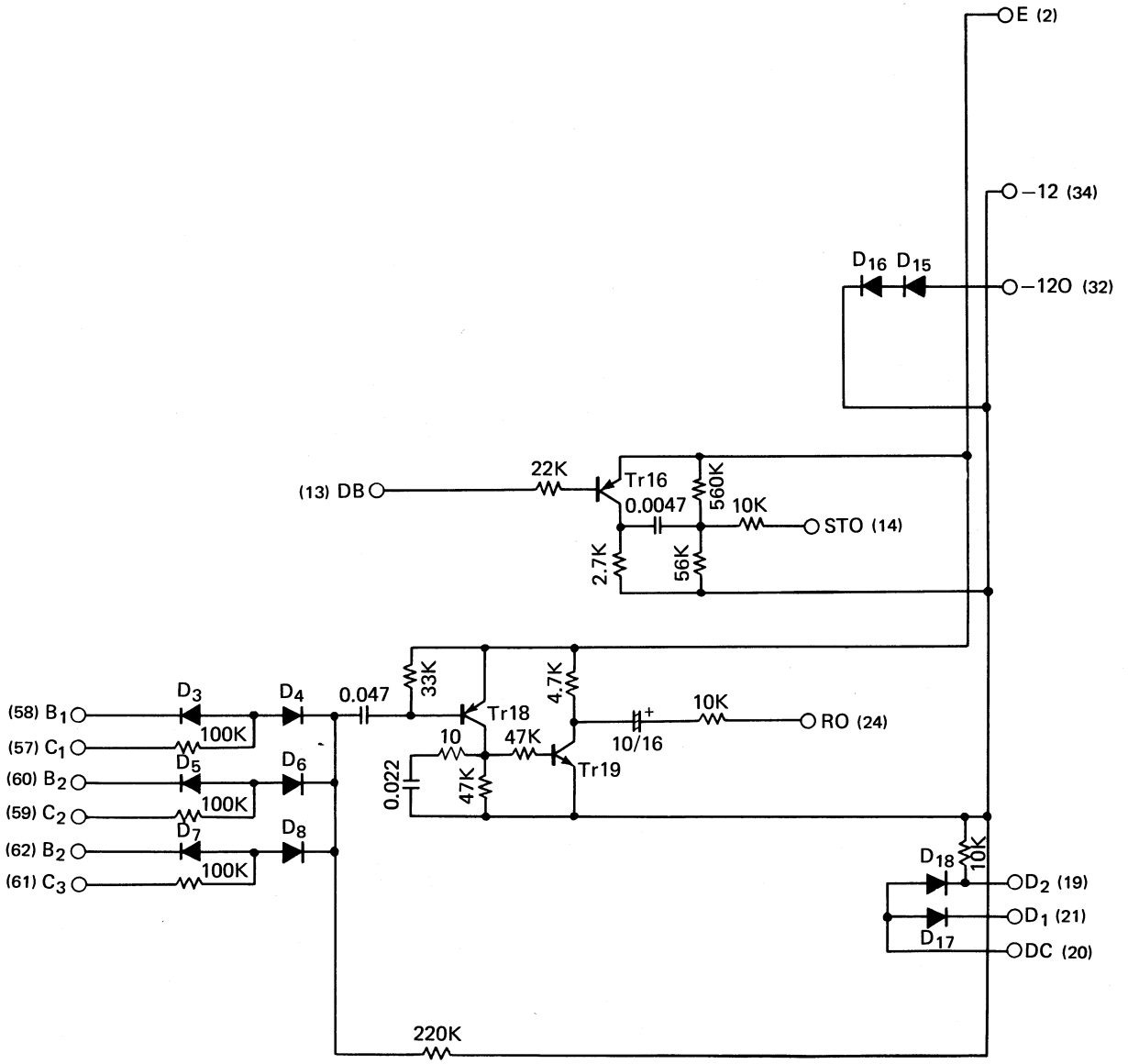

Notes) 1. Transistors
Tr16 : 2SA561(O) or (Y)
Tr18 : 2SA561(Y)
Tr19 : 2SC458(B) or (C)
2. Diodes
$D_3 \sim D_8$: 1S1555
$D_{15} \sim D_{18}$: 1S2473(VE)

PB CIRCUIT BOARD AND WIRING

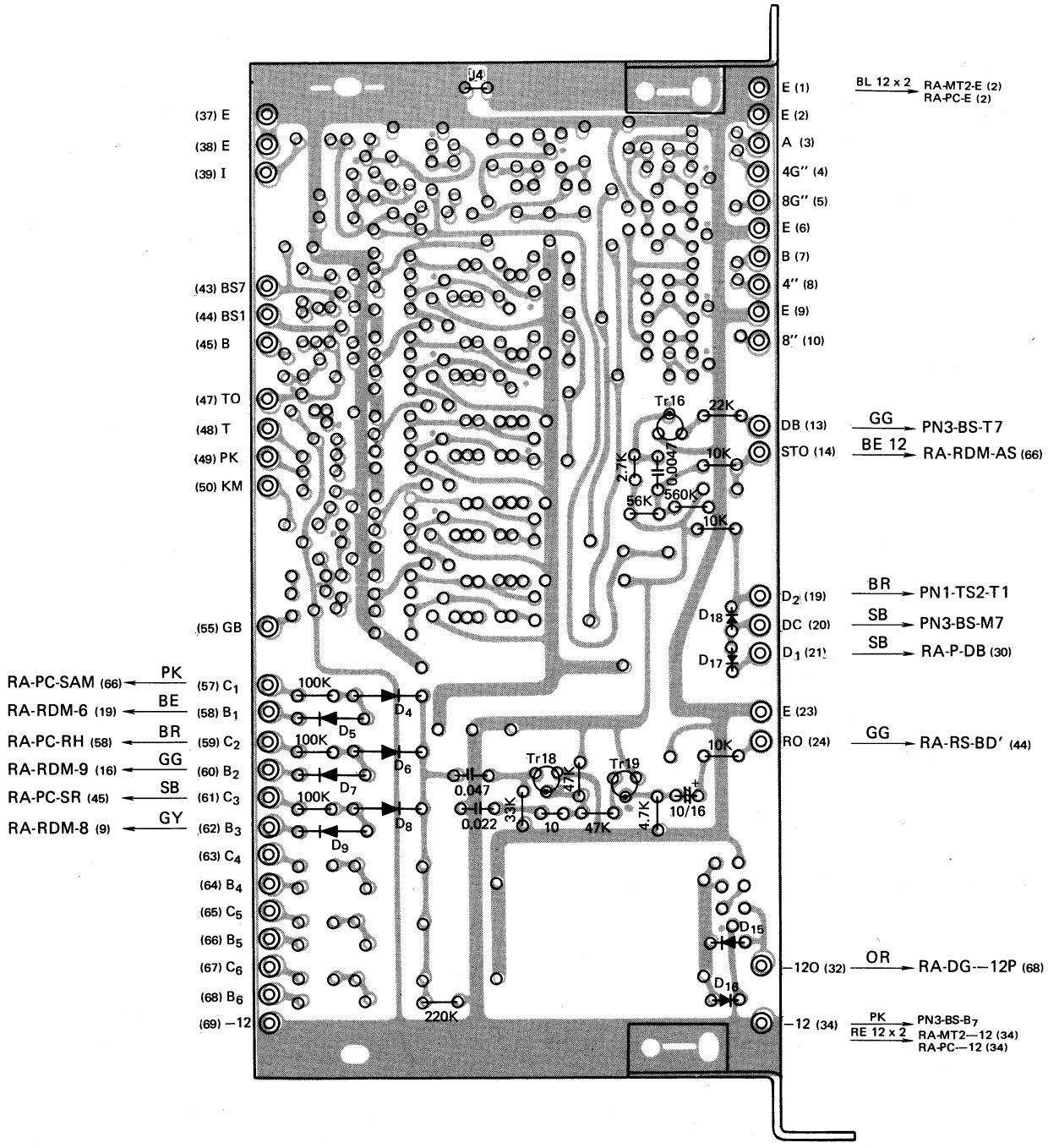

BK-7 (S/# 1001 ∿)
BK-7I (S/# 1001 ∿)
BK-7S (S/# 1001 ∿)

PC CIRCUIT DIAGRAM

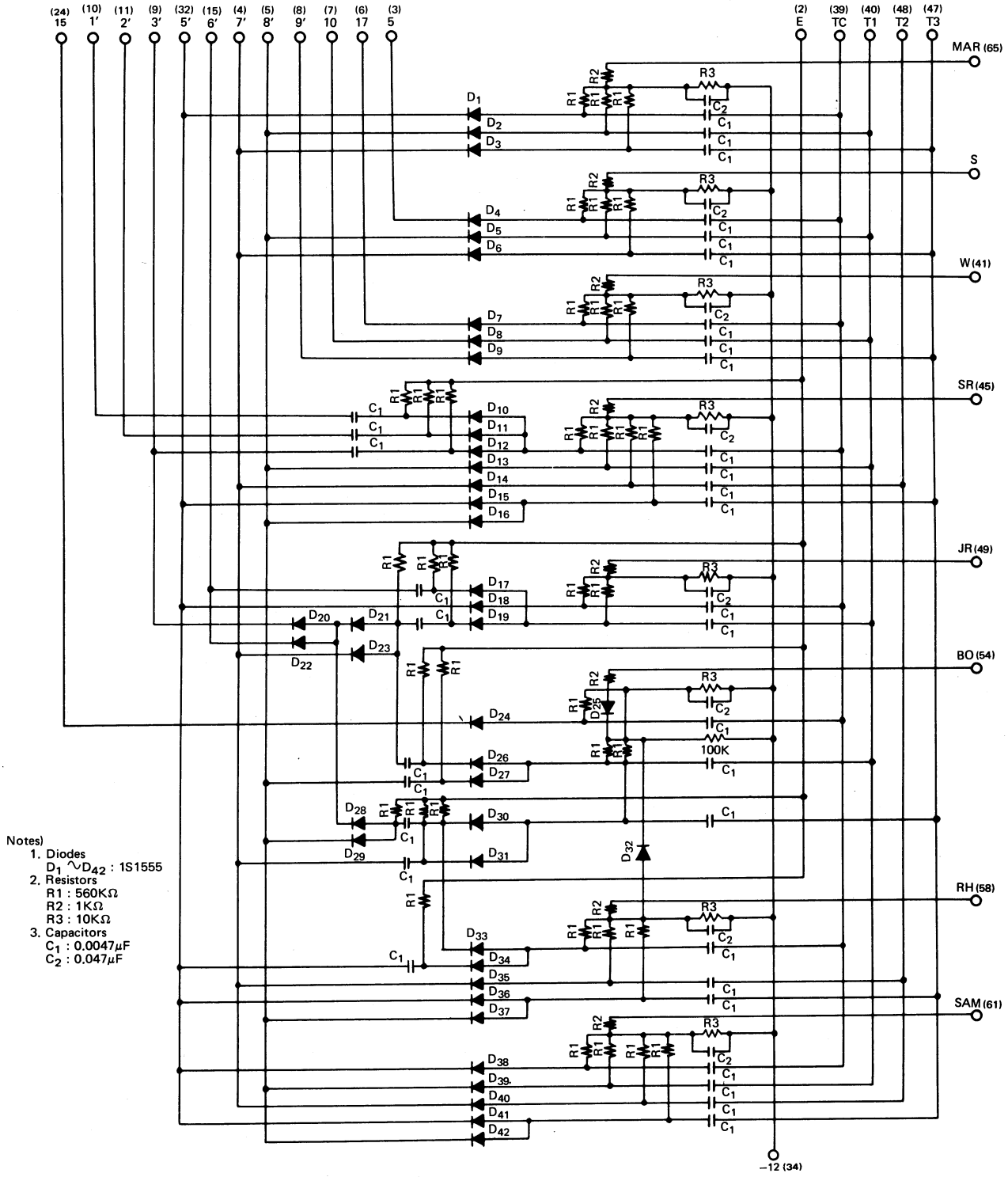

Notes)
1. Diodes
   $D_1 \sim D_{42}$: 1S1555
2. Resistors
   R1 : 560KΩ
   R2 : 1KΩ
   R3 : 10KΩ
3. Capacitors
   C_1 : 0.0047μF
   C_2 : 0.047μF

PC CIRCUIT BOARD AND WIRING

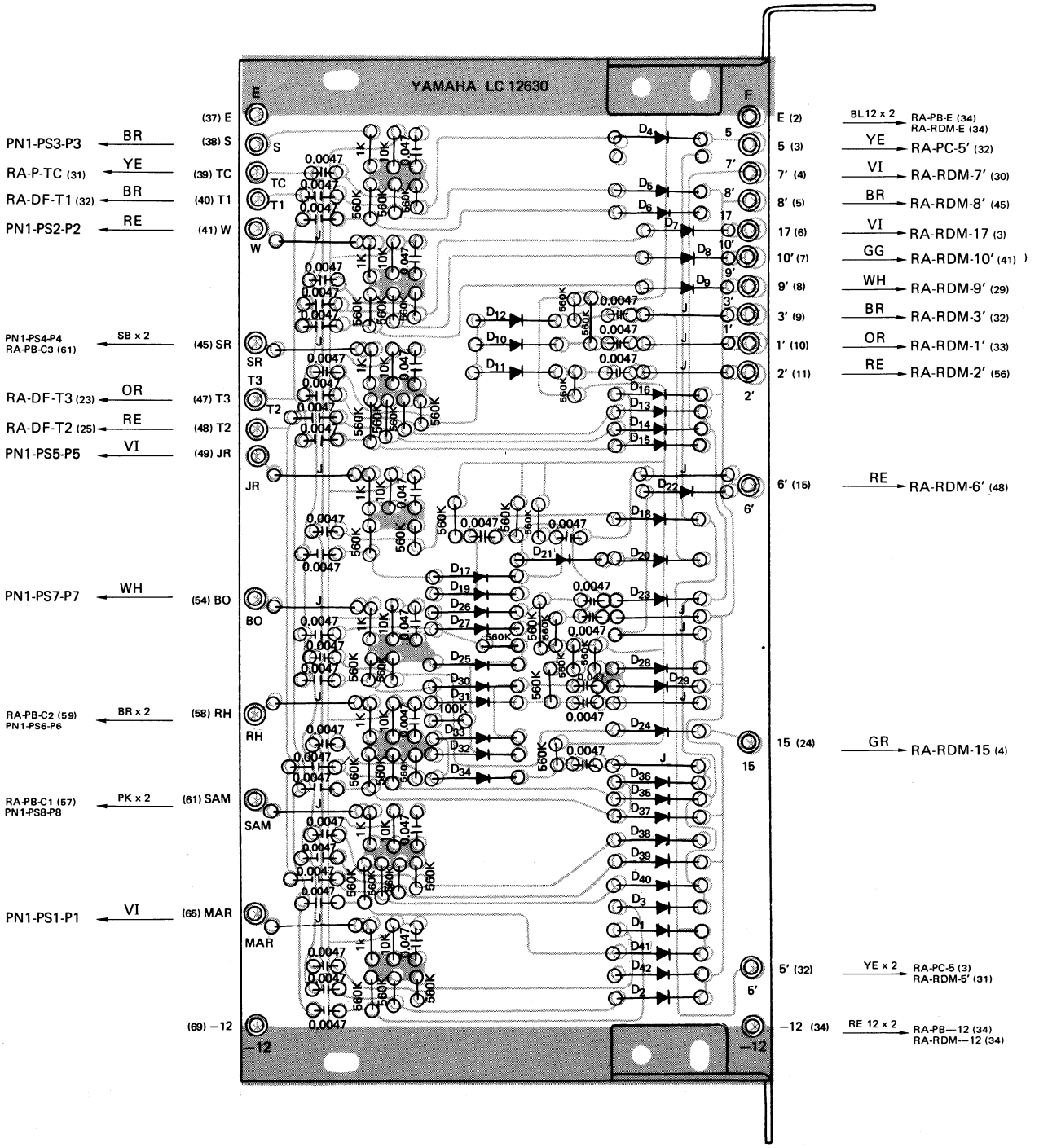

BK-7 (S/# 1001 ∿)
BK-7I (S/# 1001 ∿)
BK-7S (S/# 1001 ∿)

RDM CIRCUIT DIAGRAM

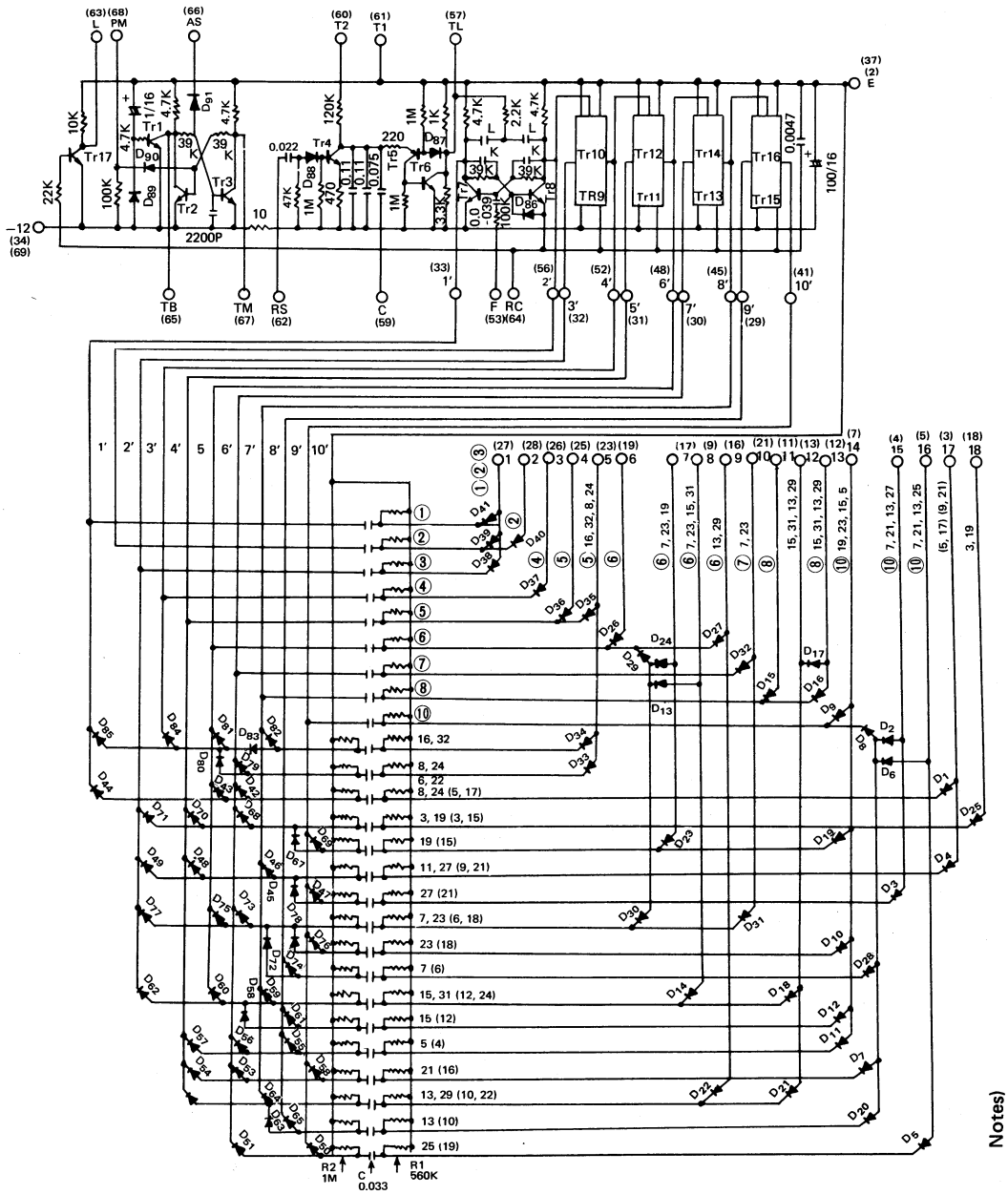

Notes)

1. Transistors
   - Tr1 ∿Tr4, Tr17 : 2SC458L(B) or (C), 2SC828Y(P) or (Q)
   - Tr5 : 2SA561(O) or (Y)
   - Tr6 : 2SC458L(B)
   - Tr7 ∿Tr16 : 2SC458L(A) or (B), 2SC828Y(O) or (P)
2. Diodes
   - D : 1S1555, 1S2473(VA) or (VC)
3. Capacitors
   - L : Ceramic Capacitor 1075 ∿1425pF
   - S : Ceramic Capacitor 675 ∿925pF
   - K : Ceramic Capacitor 875 ∿1150pF

RDM CIRCUIT BOARD AND WIRING

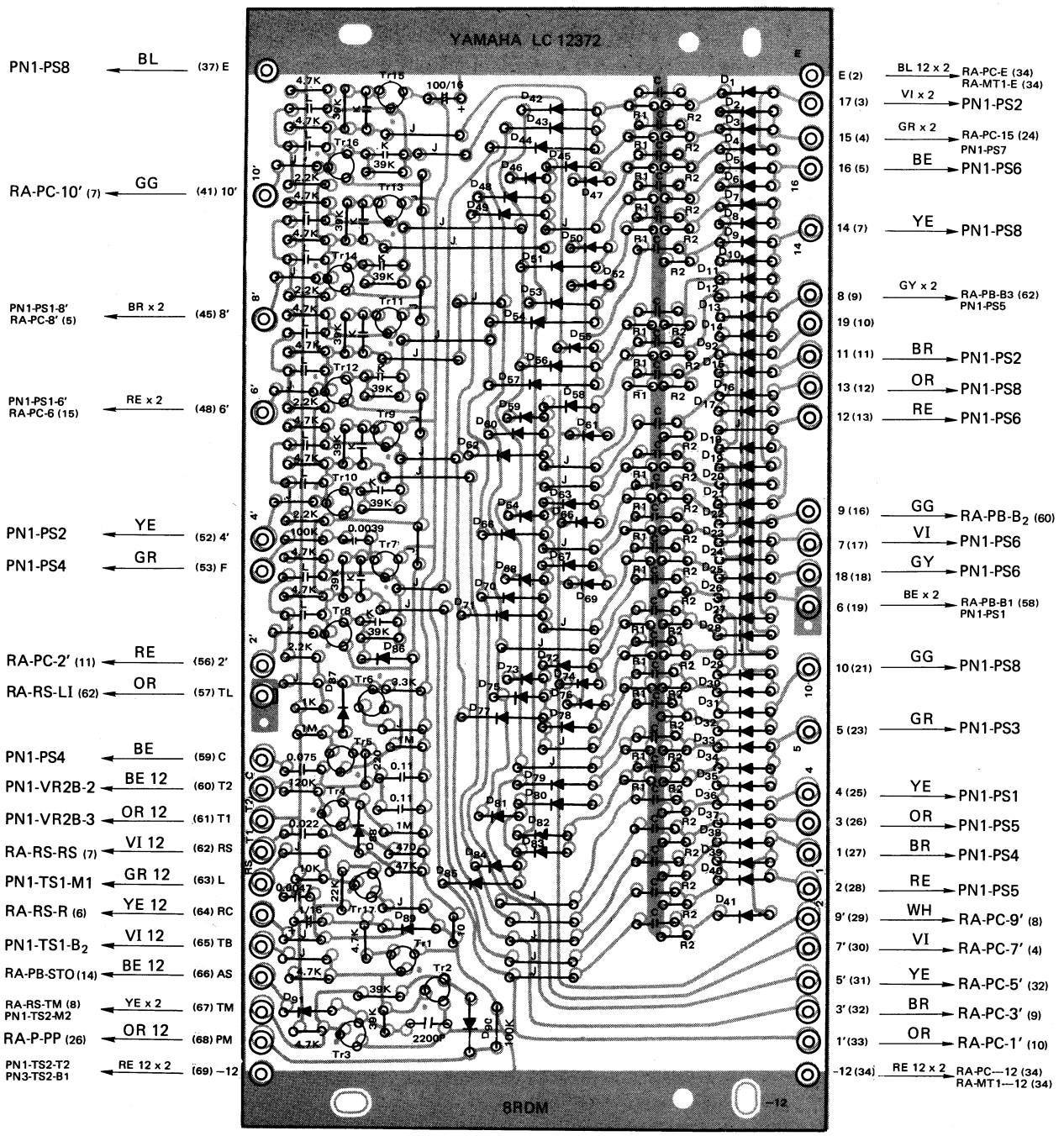

BK-7 (S/# 1001 ∿)
BK-7I (S/# 1001 ∿)
BK-7S (S/# 1001 ∿)

MT1 CURCUIT DIAGRAM

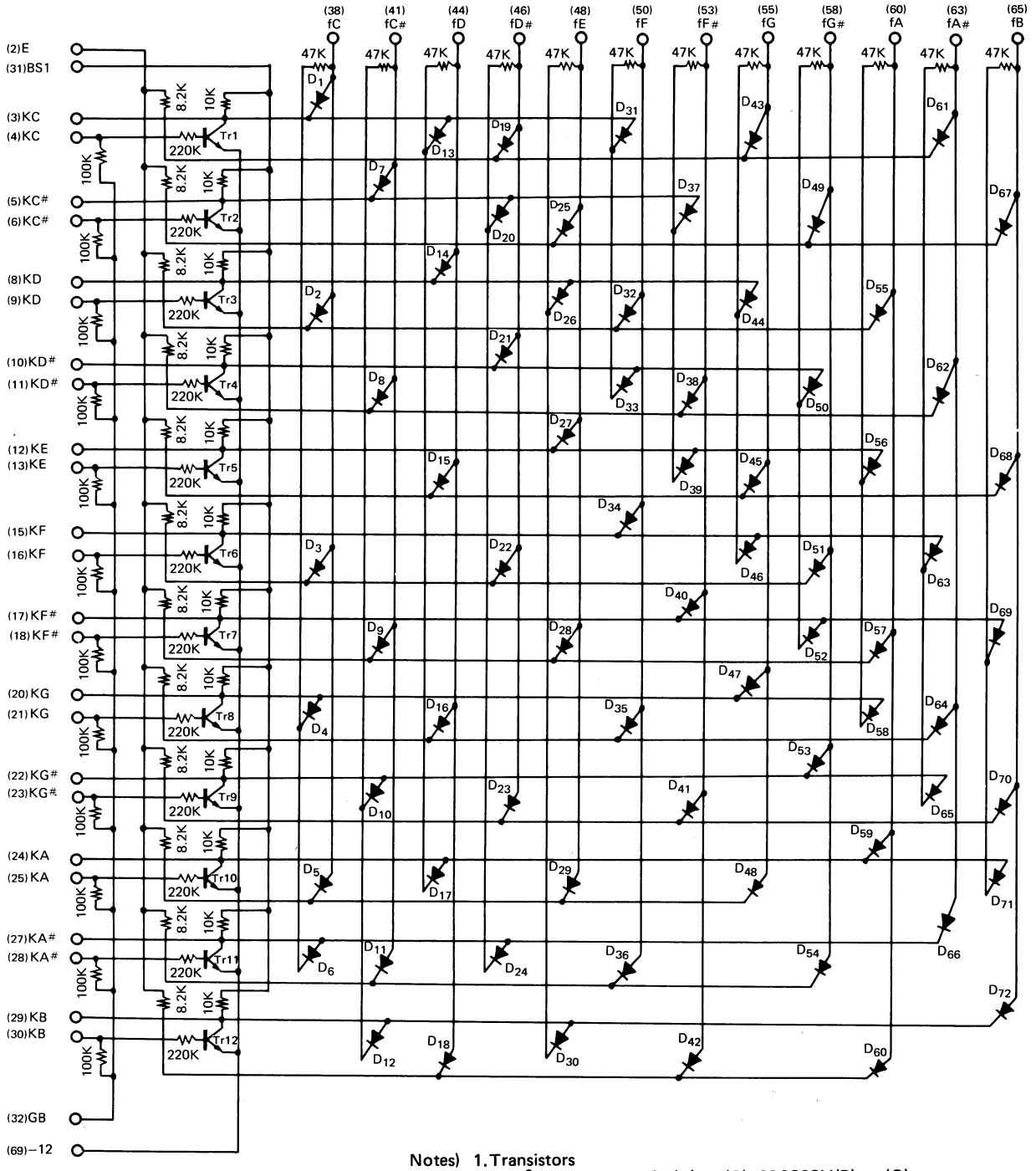

Notes) 1. Transistors
Tr1 ∿Tr12 : 2SC458L(B) or (C), 2SC828Y(P) or (Q)
2. Diodes
D_1 ∿ D_{72} : 1S1555

MT1 CIRCUIT BOARD AND WIRING

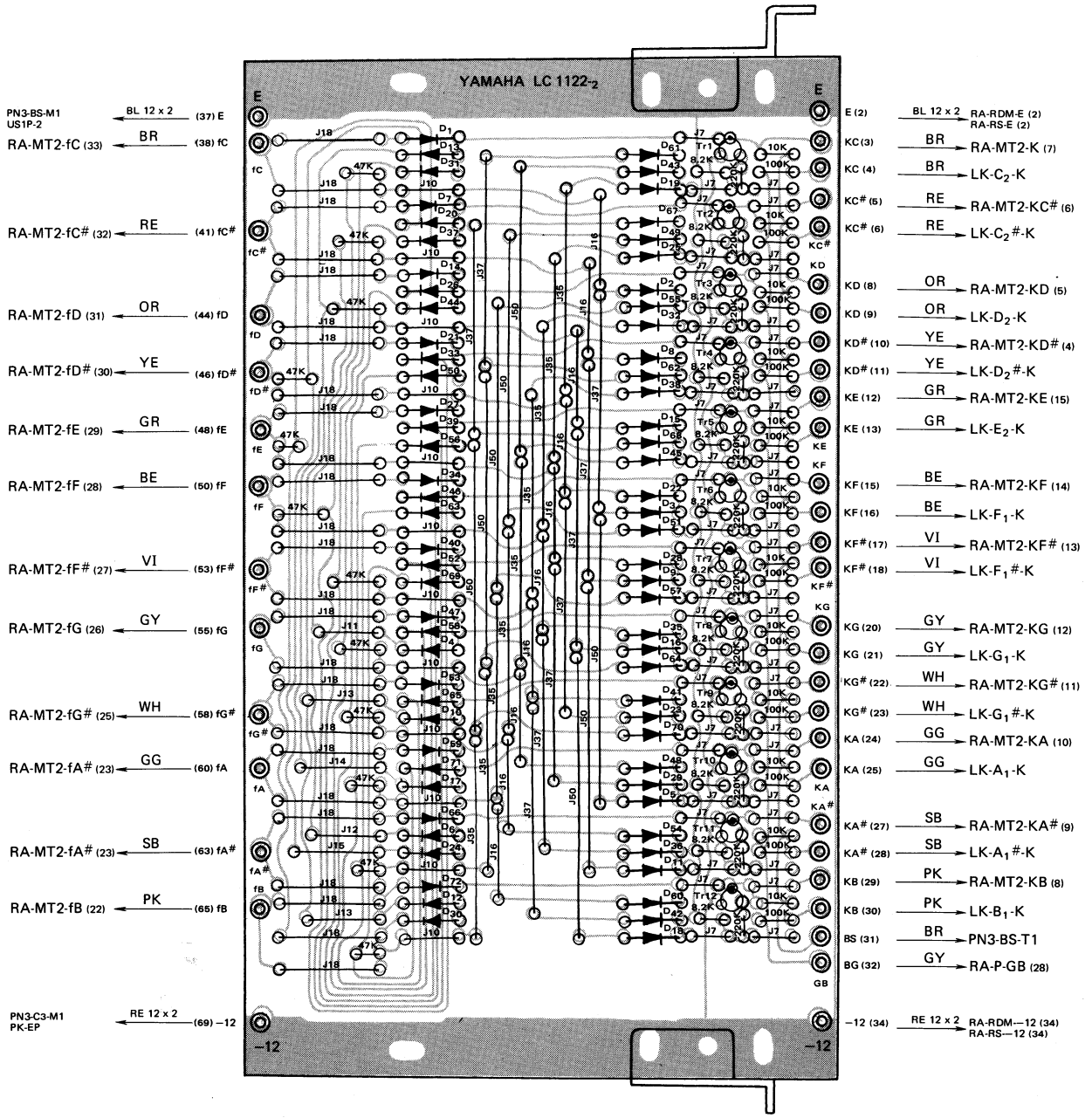

BK-7 (S/# 1001 ∿)
BK-7I (S/# 1001 ∿)
BK-7S (S/# 1001 ∿)

RS CIRCUIT DIAGRAM

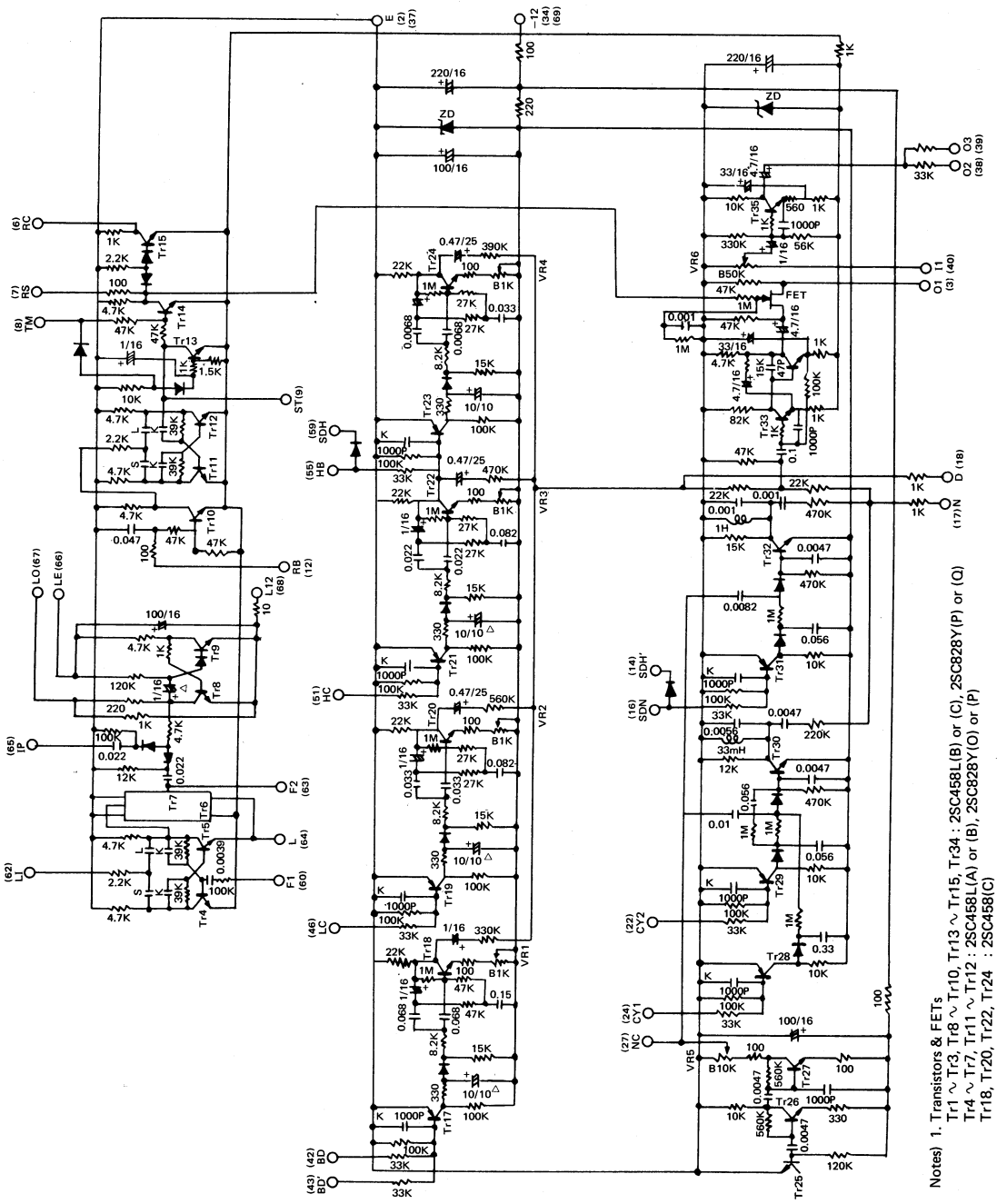

Notes) 1. Transistors & FETs
Tr1 ∿ Tr3, Tr8 ∿ Tr10, Tr13 ∿ Tr15, Tr34 : 2SC458L(B) or (C), 2SC828Y(P) or (Q)
Tr4 ∿ Tr7, Tr11 ∿ Tr12 : 2SC458L(A) or (B), 2SC828Y(O) or (P)
Tr18, Tr20, Tr22, Tr24 : 2SC458(C)
Tr33, Tr35 : 2SC458LG(C)
Tr26 ∿ Tr27, Tr30, Tr32 : 2SC458(C), 2SC828Y(Q)
Tr17, Tr19, Tr21, Tr23, Tr28 ∿ Tr29, Tr31 : 2SA561(O) or (Y)
Tr25 : 2SC460(C)
FET : 2SK30(O) or (Y)
2. Diodes
D : 1S1555, 1S2473(VA) or (VC)
ZD : 1S1715 (Zener)
3. Capacitors
△ : Solid Aluminum Capacitor
L : Ceramic Capacitor 1075 ∿ 1425pF
S : Ceramic Capacitor 675 ∿ 925pF
K : Ceramic Capacitor 875 ∿ 1150pF

RS CIRCUIT BOARD AND WIRING

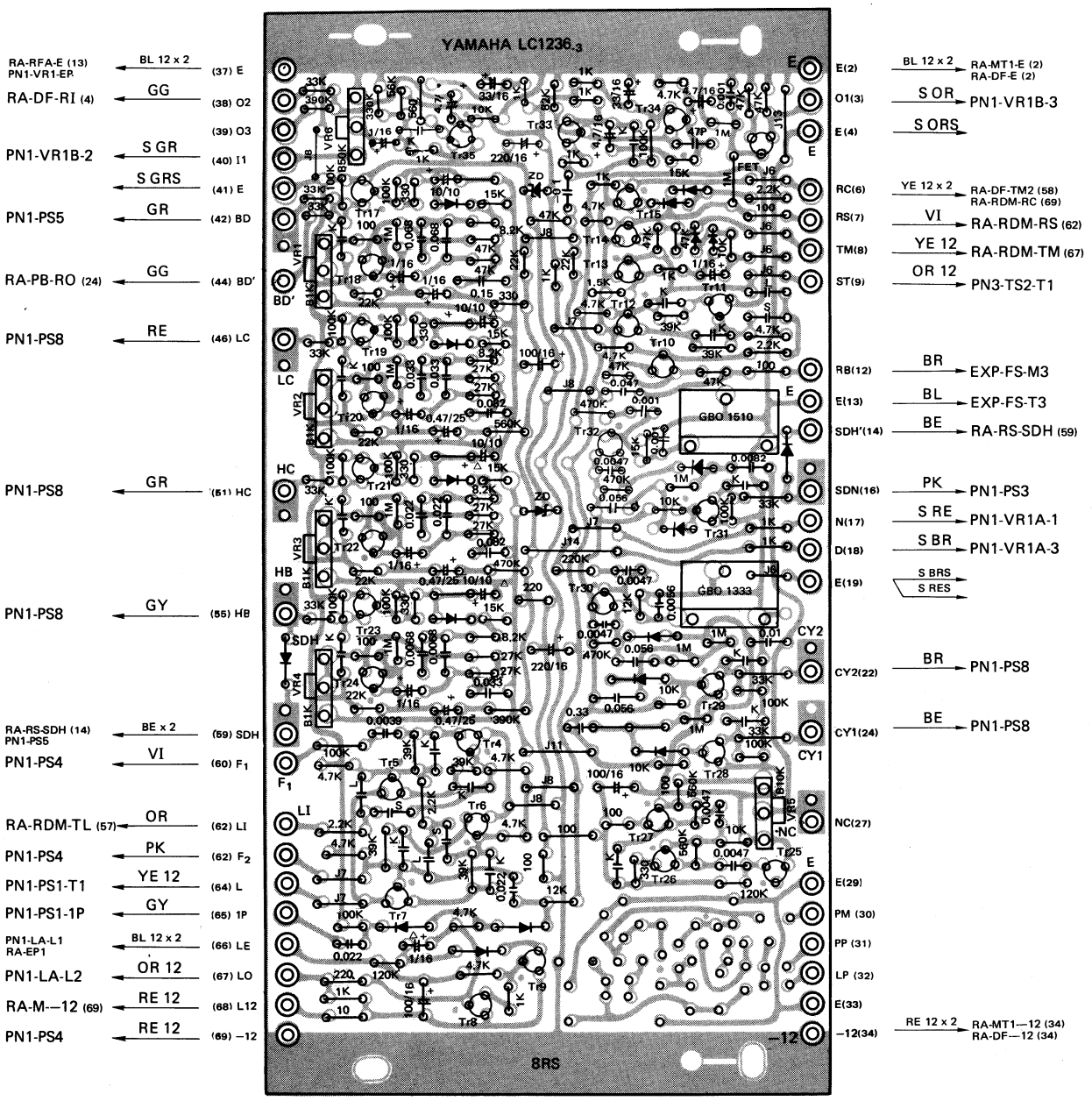

DF CIRCUIT DIAGRAM

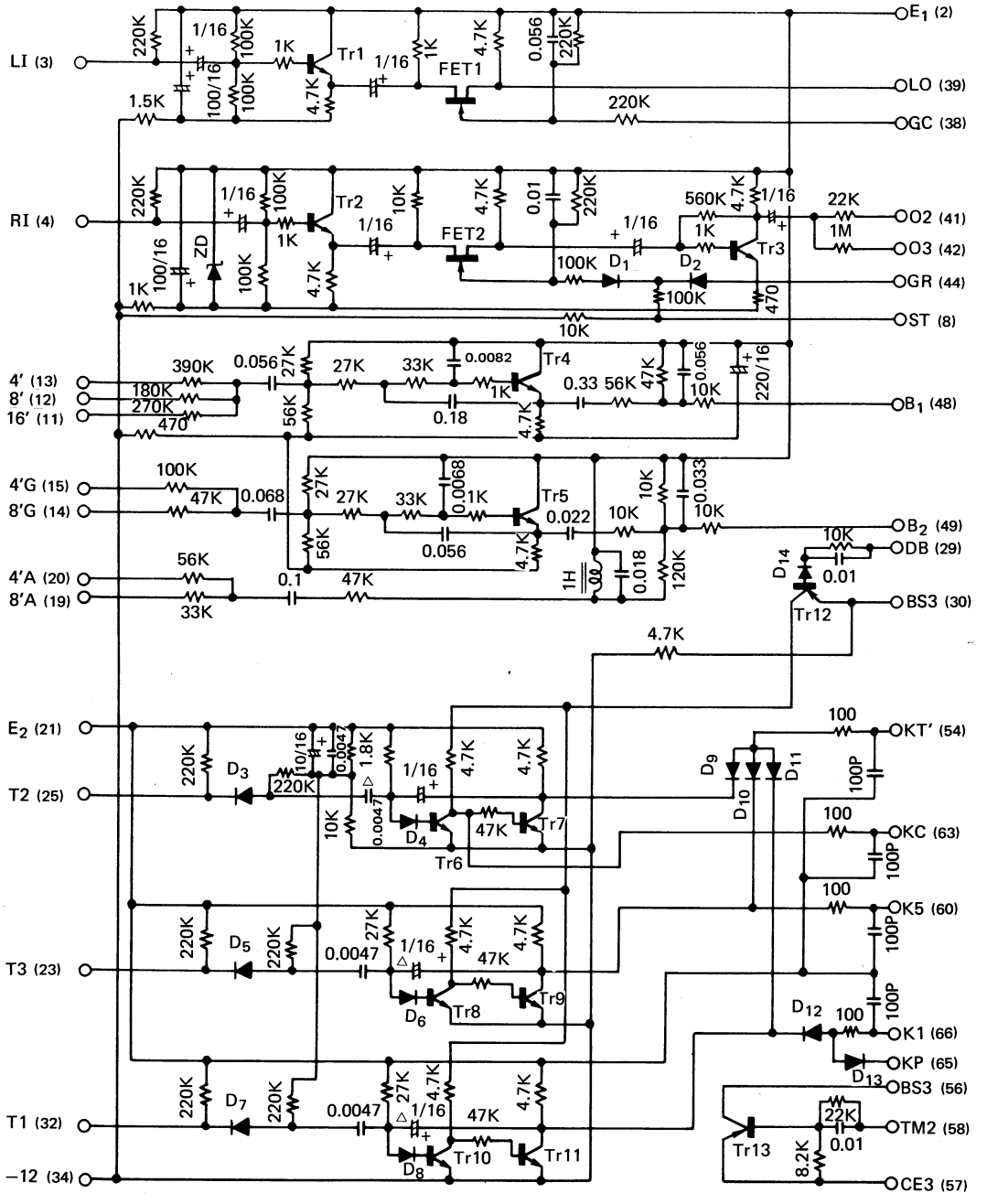

Notes) 1. Transistors & FETs
Tr1 ∿ Tr11 : 2SC458(B) or (C)
Tr12 ∿ Tr13 : 2SA561(O) or (Y)
FET : 2SK30(Y)
2. Diodes
D : 1S1555
ZD : 1S1715 (Zener)
3. Capacitors
△ : Solid Aluminum Capacitor

DF CIRCUIT BOARD AND WIRING

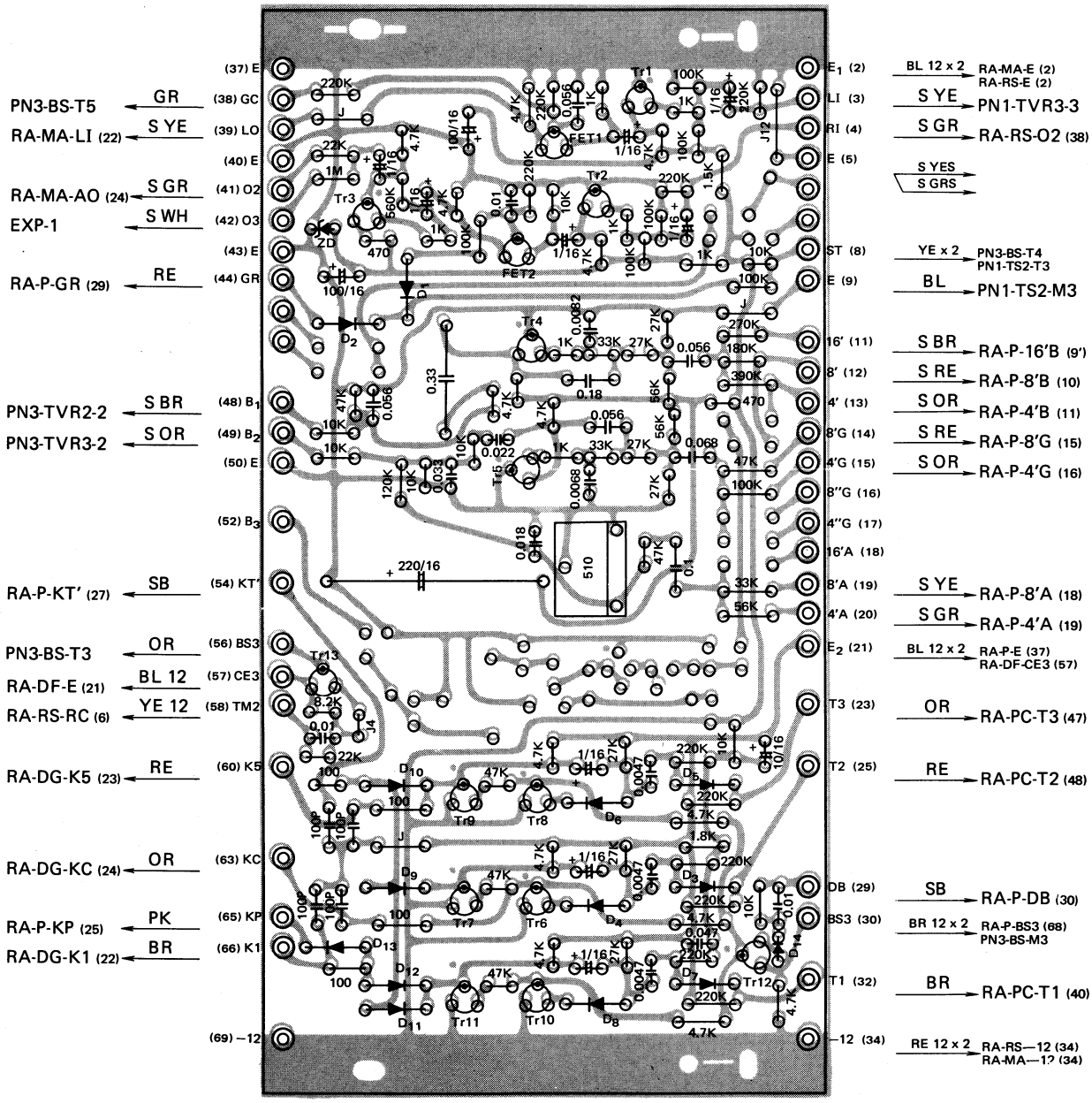

MA CIRCUIT DIAGRAM

TRANSISTOR VOLTAGE CHART

REF.	E	B	C
Tr1	−5.7	−5.0	−3.8
Tr2	−4.6	−3.8	0
Tr3	−6.1	−5.5	−4.8
Tr4	−5.5	−4.8	−3.1
Tr5	−6.2	−4.0	−3.5
Tr6	−8.9	−10.5	−7.6
Tr7	−8.6	−7.6	−3.6
Tr8	−10.8	−9.7	−6.2
Tr9	−8.4	−4.6	0
Tr10	−5.7	−5.8	0
Tr11	−5.7	−5.0	−5.6
Tr12	−9.7	−9.2	−6.0
Tr13	−6.8	−6.0	0
Tr14	−6.7	−5.4	0
Tr15	−25.3	−24.7	−7.4
Tr16	−10.0	−9.0	0

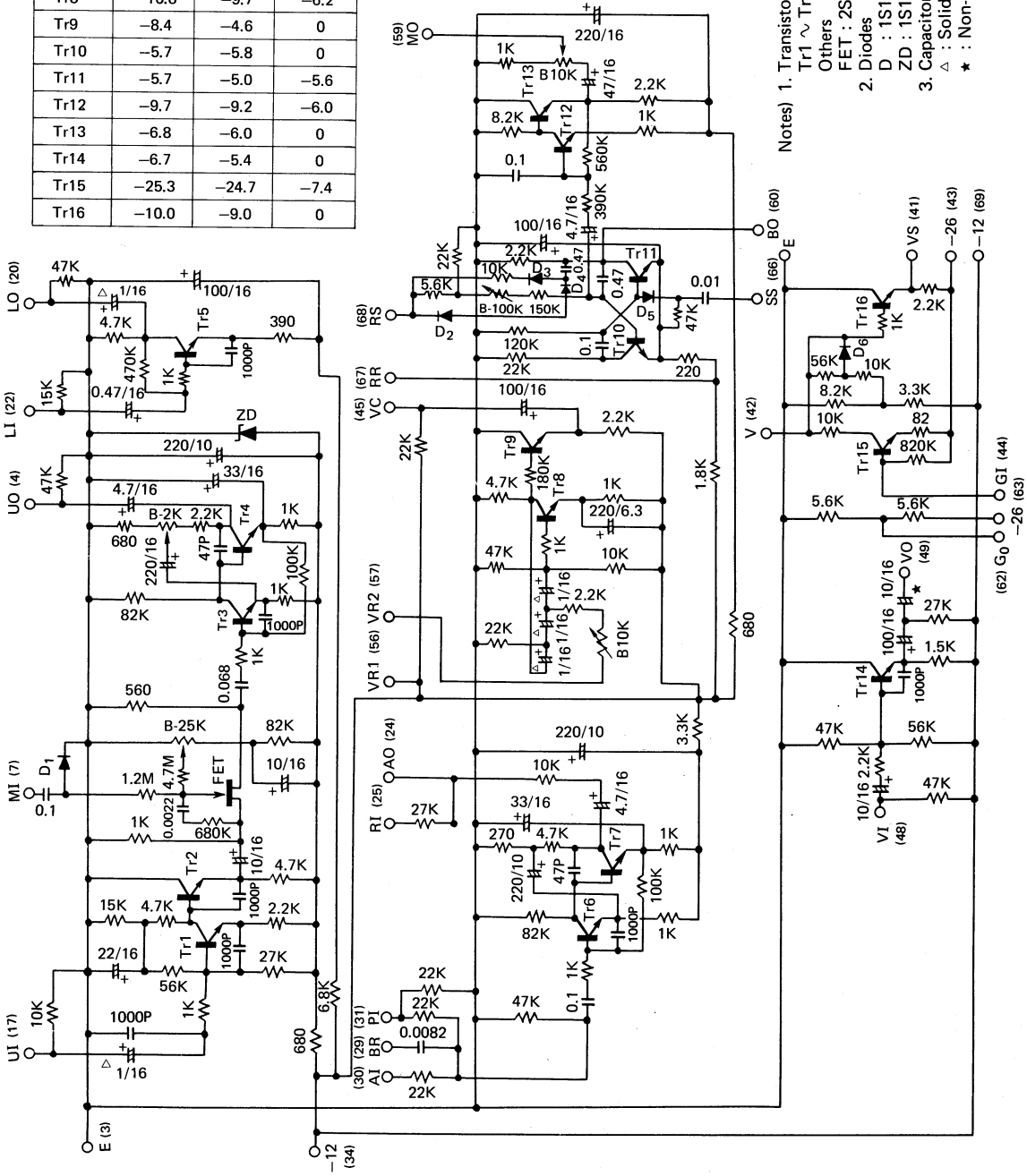

MA CIRCUIT BOARD AND WIRING

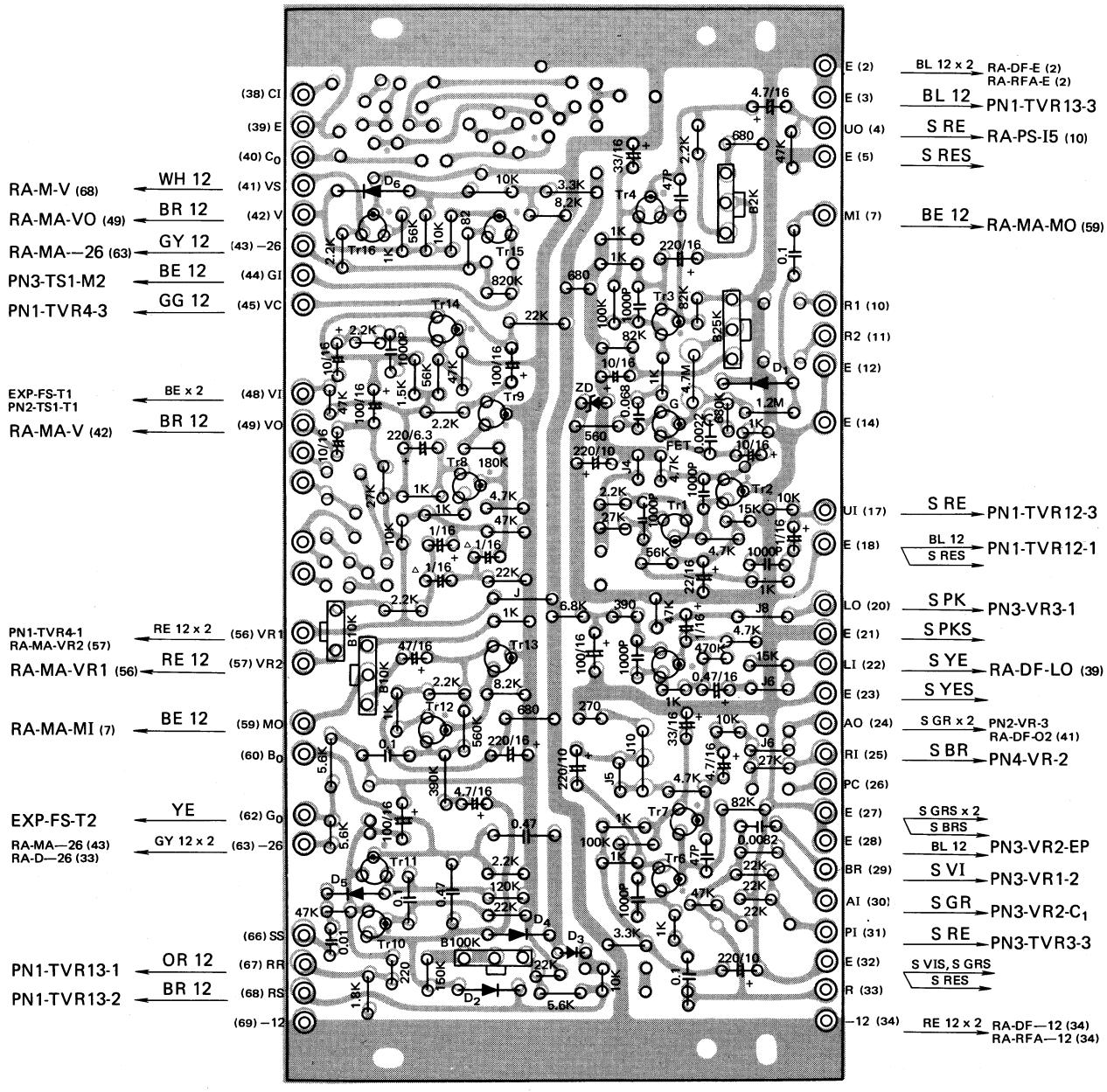

BK-7 (S/# 1001 ∿)
BK-7I (S/# 1001 ∿)
BK-7S (S/# 1001 ∿)

RFA CIRCUIT DIAGRAM

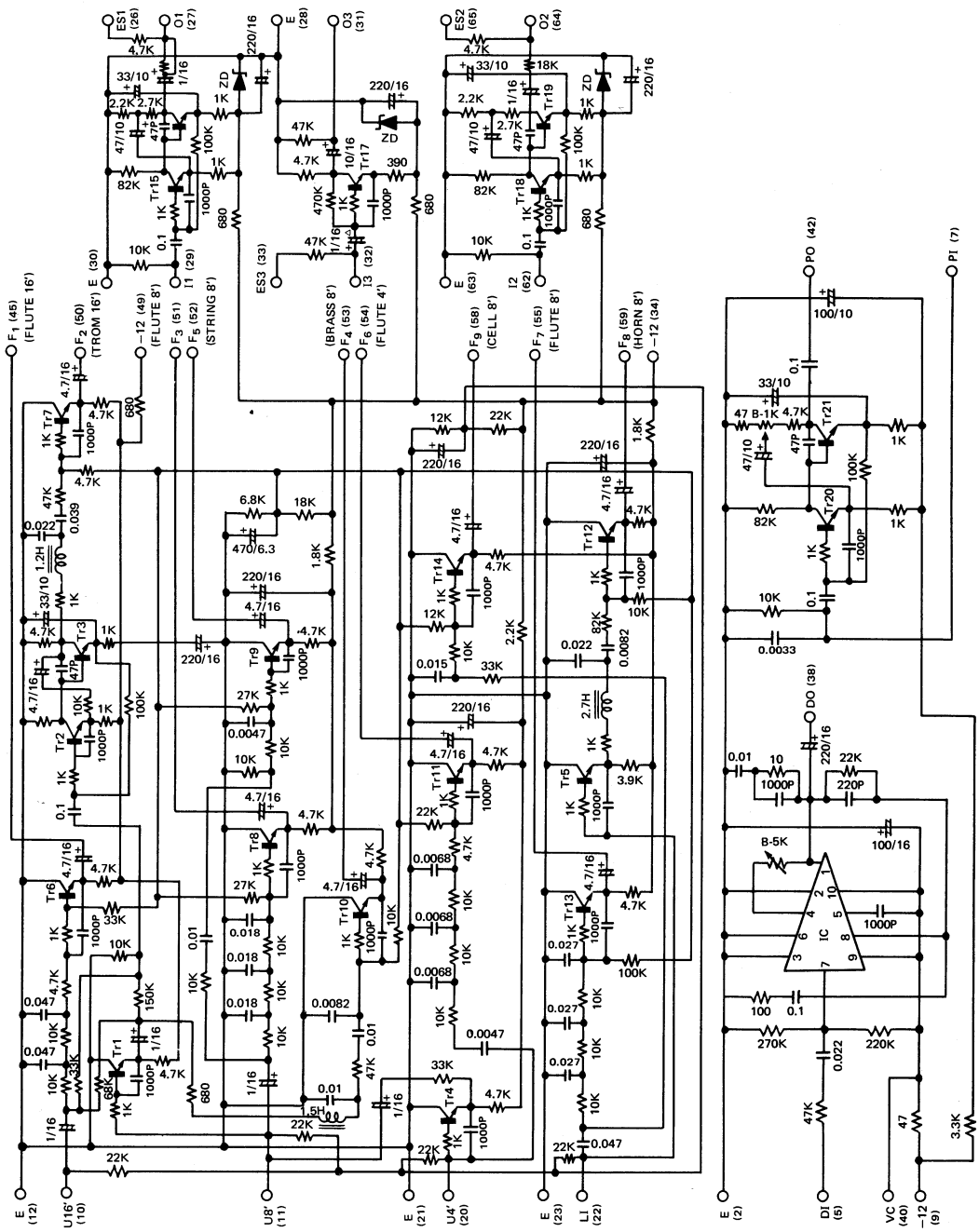

TRANSISTOR VOLTAGE CHART

REF.	E	B	C
Tr1	−5.0	−3.8	0
Tr2	−9.0	−8.7	−7.6
Tr3	−8.5	−7.6	−3.4
Tr4	−5.0	−3.8	0
Tr5	−5.0	−3.8	0
Tr6	−2.8	−1.9	0
Tr7	−3.7	−2.9	0
Tr8	−3.8	−2.7	0
Tr9	−2.0	−1.3	0
Tr10	−3.8	−2.9	0

REF.	E	B	C
Tr11	−3.8	−2.8	0
Tr12	−3.7	−2.9	0
Tr13	−3.9	−2.7	0
Tr14	−3.8	−2.9	0
Tr15	−6.1	−5.5	−4.8
Tr16	−5.5	−4.8	−3.0
Tr17	−6.0	−5.1	−3.4
Tr18	−6.4	−5.8	−5.2
Tr19	−5.8	−5.2	−3.2
Tr20	−9.2	−11.0	−7.6
Tr21	−8.8	−7.8	−4.0

Notes) 1. Transistors & IC
Tr2, Tr15, Tr17 ∿ Tr18, Tr20 : 2SC458LG(B)
Others : 2SC458(B) or (C)
IC : AN274
2. Zener Diodes
ZD : 1S1715
3. Capacitors
△ : Solid Aluminum Capacitor

RFA CIRCUIT DIAGRAM

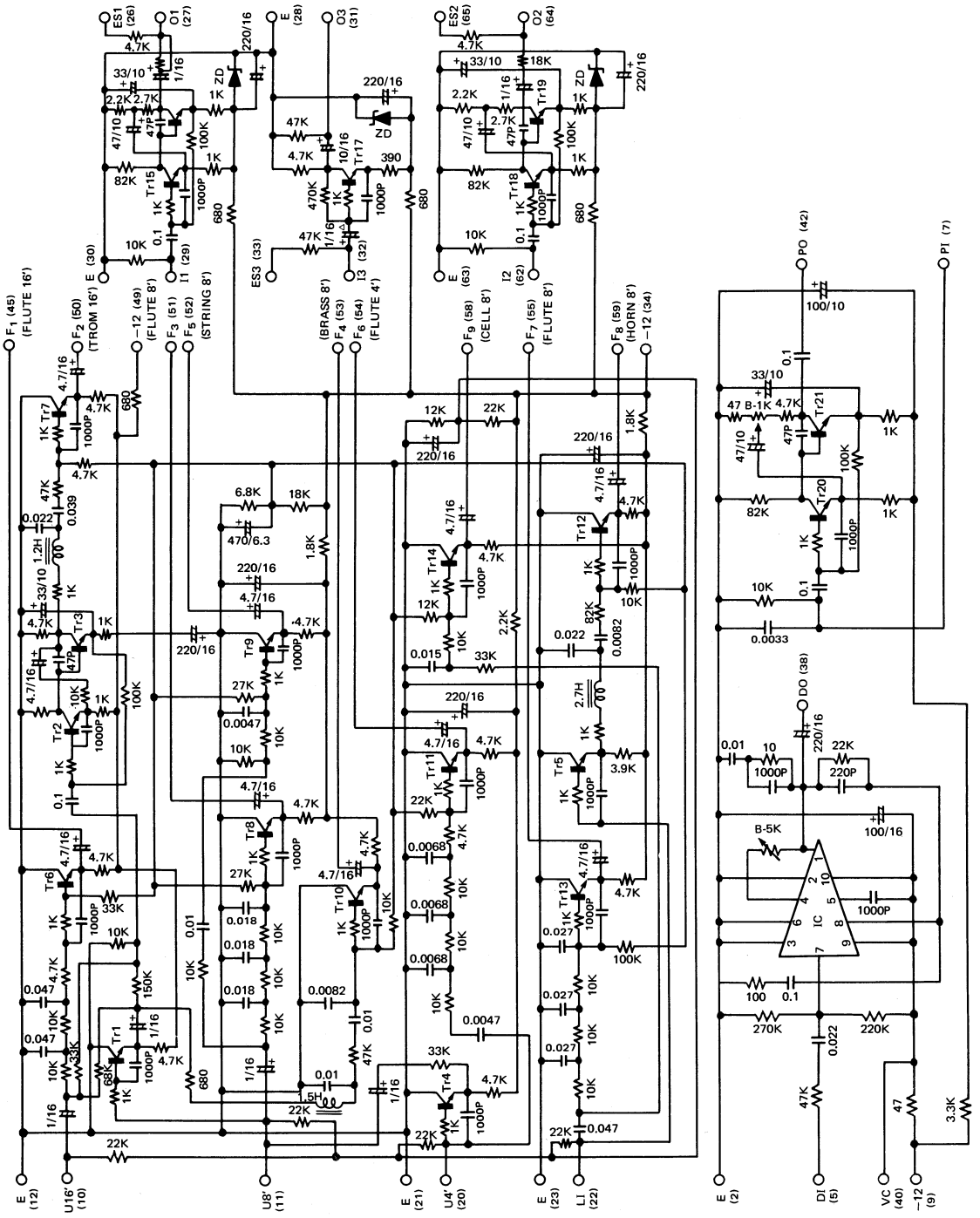

TRANSISTOR VOLTAGE CHART

REF.	E	B	C
Tr1	−5.2	−3.7	0
Tr2	−9.0	−8.7	−7.6
Tr3	−8.5	−7.6	−3.4
Tr4	−5.2	−3.6	0
Tr5	−5.2	−3.6	0
Tr6	−3.2	−2.0	0
Tr7	−4.0	−3.1	0
Tr8	−4.1	−1.7	0
Tr9	−2.3	−1.4	0
Tr10	−4.0	−3.0	0
Tr11	−4.1	−2.8	0

REF.	E	B	C
Tr12	−4.0	−3.0	0
Tr13	−4.2	−2.5	0
Tr14	−4.0	−3.0	0
Tr15	−6.6	−6.0	−5.3
Tr16	−6.2	−5.4	−3.6
Tr17	−6.7	−5.8	−4.0
Tr18	−6.2	−5.6	−5.0
Tr19	−5.7	−5.0	−3.2
Tr20	−8.6	−11.0	−7.3
Tr21	−8.6	−7.2	−4.0

Notes) 1. Transistors & IC
Tr2, Tr15, Tr17 ∿ Tr18, Tr20 : 2SC458LG(B)
Others : 2SC458(B) or (C)
IC : AN274
2. Zener Diodes
ZD : 1S1715
3. Capacitors
△ : Solid Aluminum Capacitor

BK-7 (S/# 10001 ∿)
BK-7I (S/# 10001 ∿)
BK-7S (S/# 10001 ∿)

RFA CIRCUIT BOARD AND WIRING

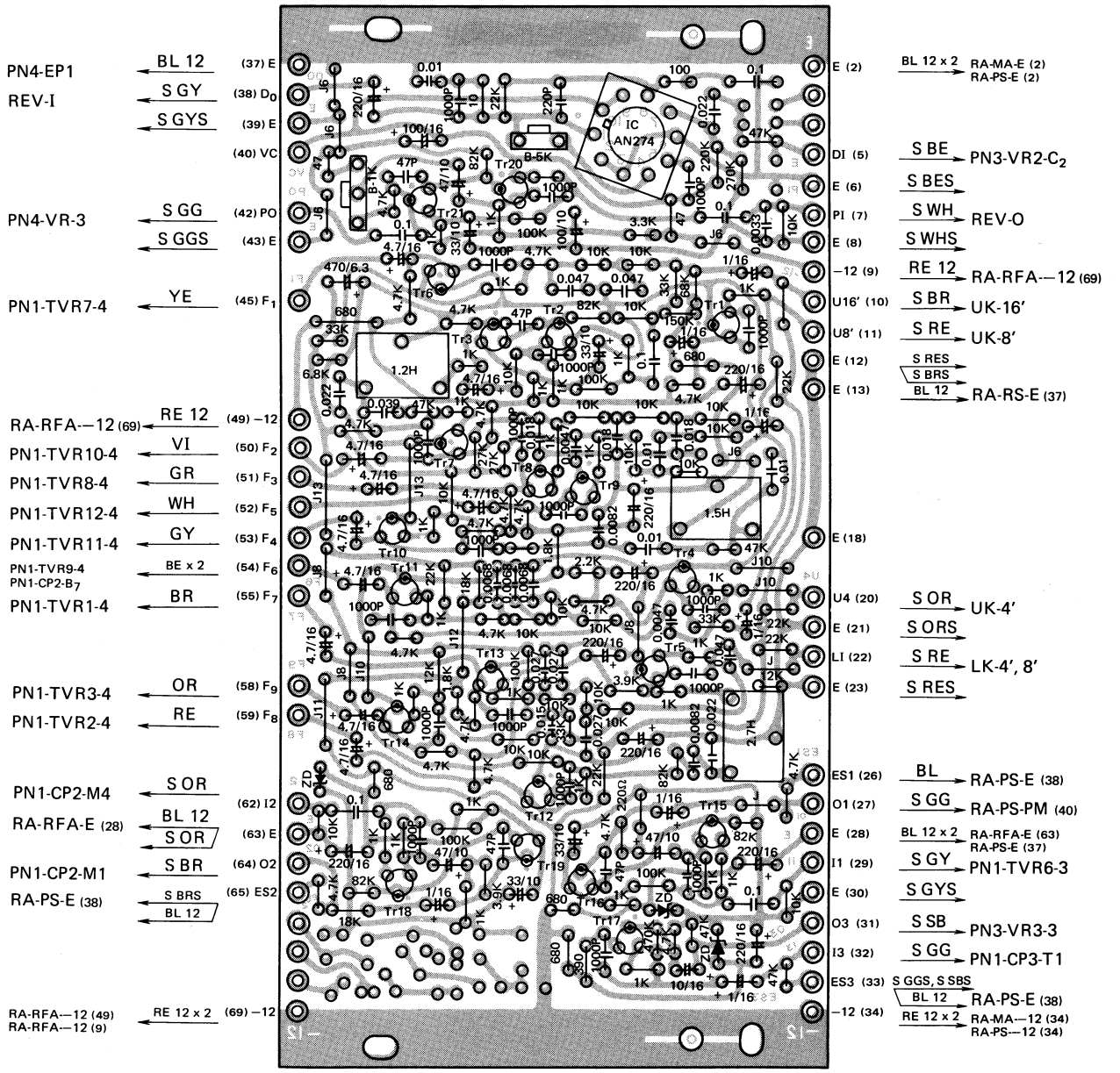

RFA CIRCUIT BOARD AND WIRING

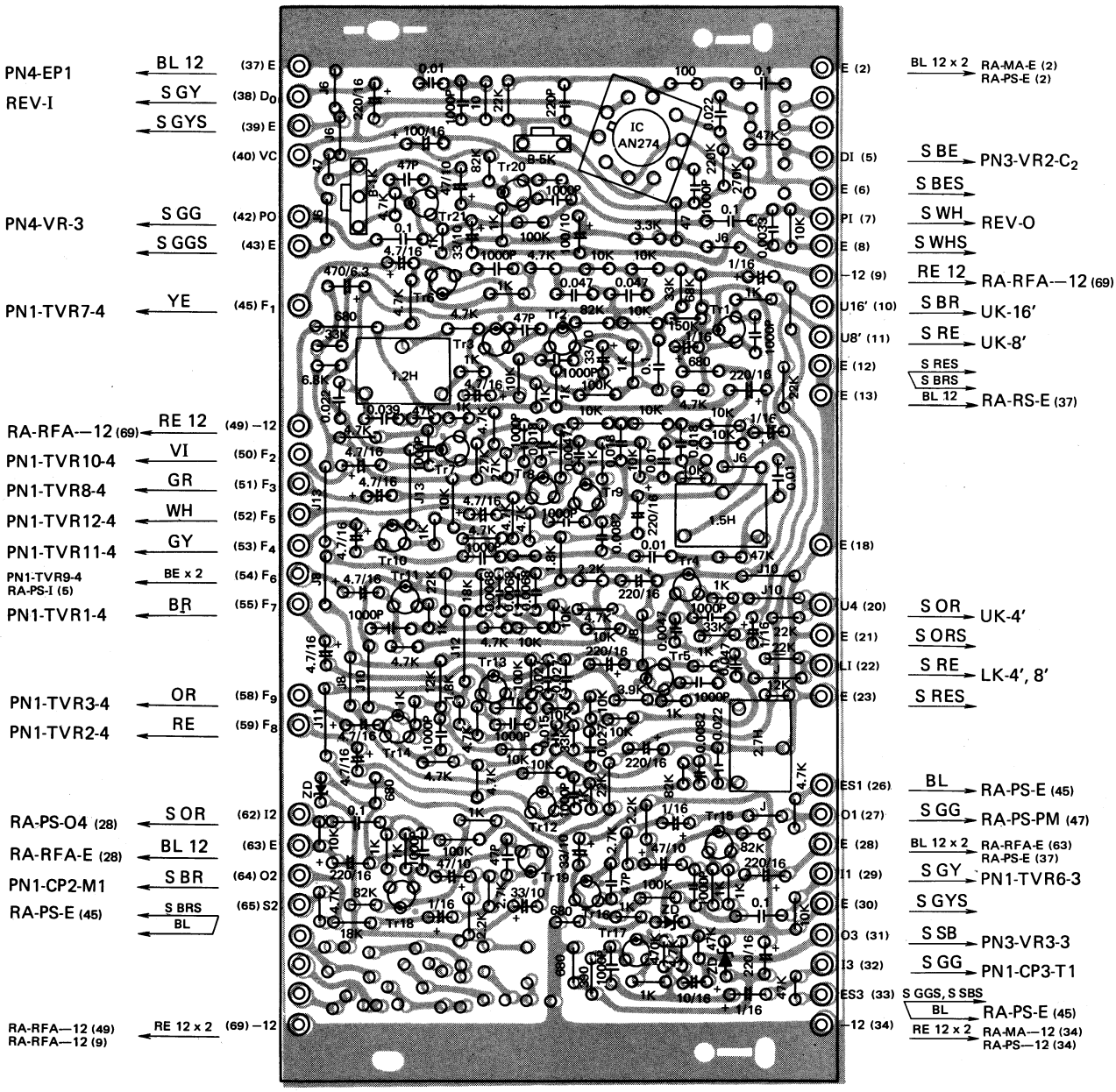

BK-7 (S/# 1001 ∿)
BK-7I (S/# 1001 ∿)
BK-7S (S/# 1001 ∿)

PS CIRCUIT DIAGRAM

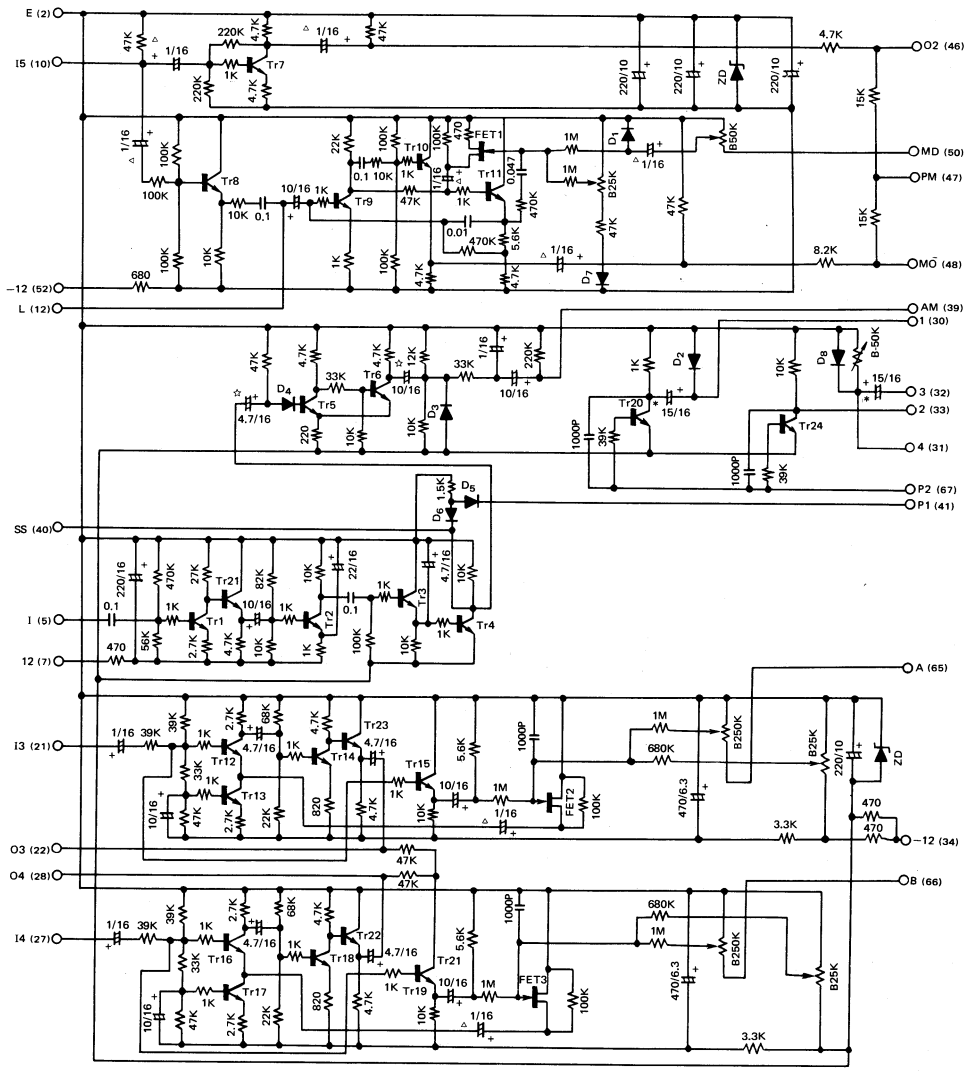

TRANSISTOR VOLTAGE CHART

REF.	E	B	C
Tr1	−10.5	−9.9	−4.6
Tr2	−10.7	−9.5	−5.2
Tr3	−6.5	−4.9	0
Tr4	−6.8	−6.4	0
Tr5	−6.5	−5.8	−6.4
Tr6	−6.5	−6.5	0
Tr7	−4.6	−3.0	−1.5
Tr8	−3.7	−2.5	0
Tr9	−6.0	−5.2	−2.8
Tr10	−3.8	−2.6	0
Tr11	−3.6	−2.7	0
Tr12	−1.8	−1.0	−0.6

REF.	E	B	C
Tr13	−2.7	−1.8	−1.8
Tr14	−3.1	−2.3	−1.1
Tr15	−1.8	−1.0	0
Tr16	−1.8	−1.0	−0.6
Tr17	−2.7	−1.8	−1.8
Tr18	−3.1	−2.3	−1.0
Tr19	−1.8	−1.0	0
Tr20	−6.8	−6.1	−6.7
Tr21	−5.8	−4.5	0
Tr22	−1.6	−1.0	0
Tr23	−1.7	−1.0	0
Tr24	−6.8	−6.2	−6.7

Notes) 1. Transistors & FETs
Tr7 ∿ Tr10, Tr12 ∿ Tr14, Tr16 ∿ Tr18 : 2SC458LG(B)
Tr12, Tr17, Tr22 : 2SK30(Y)
FET : 2SK30(Y)
Others : 2SC458(B) or (C)
2. Diodes
D : 1S1555
ZD : 1S1715 (Zener)
3. Capacitors
△ : Solid Aluminum Capacitor
☆ : Non-polar Capacitor
1000pF : Ceramic Capacitor

PS CIRCUIT DIAGRAM

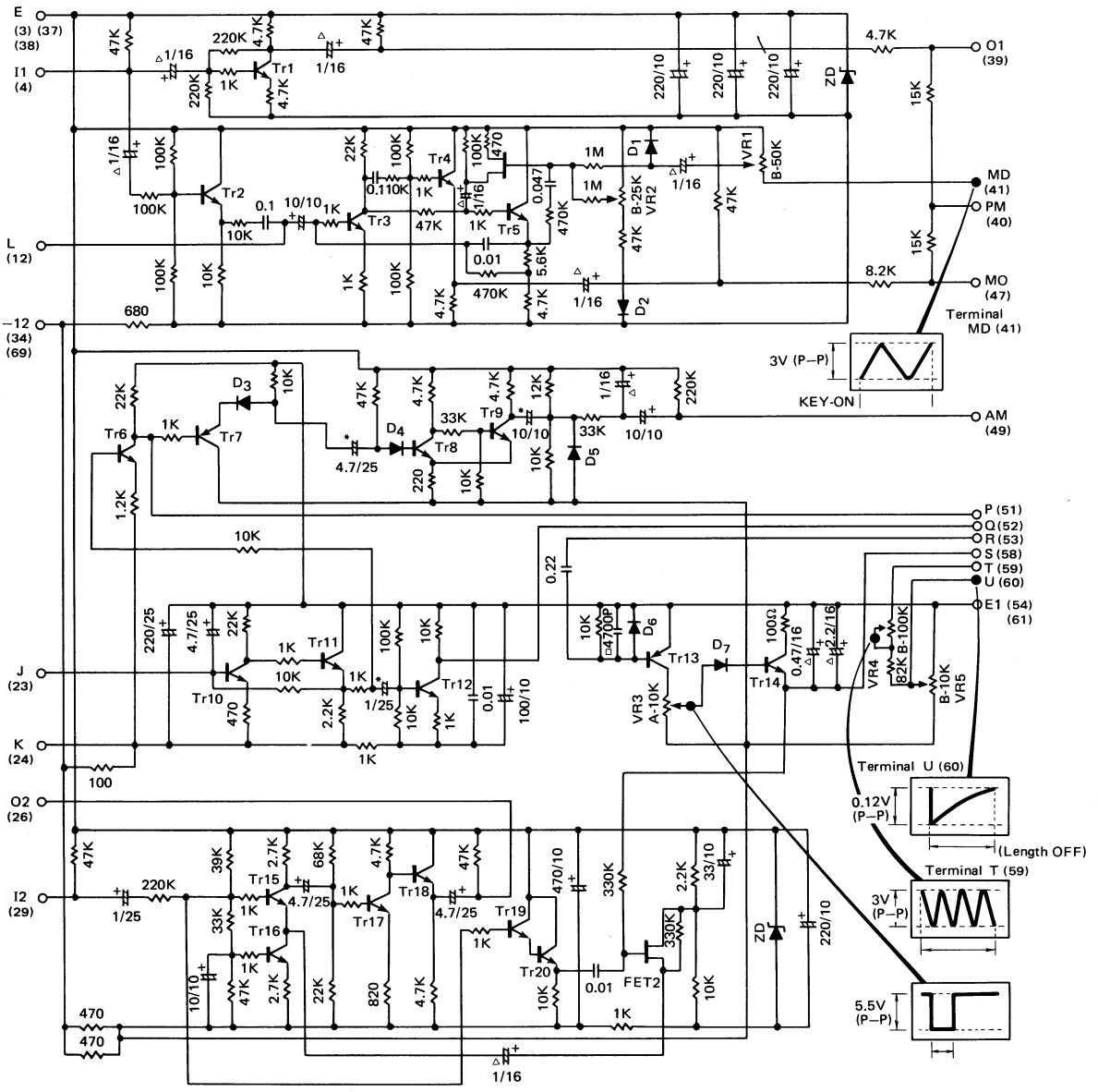

TRANSISTOR VOLTAGE CHART

REF.	E	B	C
Tr1	−4.8	−2.8	−1.6
Tr2	−3.9	−2.3	0
Tr3	−6.1	−5.4	−2.9
Tr4	−4.0	−2.3	0
Tr5	−3.8	−2.7	0
Tr6	−12.0	−9.8	−3.9
Tr7	−4.2	−4.0	−7.2
Tr8	−6.8	−6.1	−6.7
Tr9	−6.8	−6.6	0
Tr10	−12.0	−12.0	−11.0
Tr11	−12.0	−12.0	0

REF.	E	B	C
Tr12	−12.0	−9.1	−3.4
Tr13	0	0	−6.3
Tr14	−2.7	−0.4	0
Tr15	−2.6	−1.5	−1.4
Tr16	−4.1	−2.7	−2.7
Tr17	−4.8	−3.9	−3.2
Tr18	−4.0	−3.2	0
Tr19	−0.5	−1.6	0
Tr20	−3.1	−0.5	0
Tr21			

Note) 1. Tr1 ∿ 4, 15 ∿ 17 : Low Noise Transistors – 2SC458(B) or (C)
Tr7, 13 : 2SA561
2. FET : 2SK30(Y)
3. * marked : Non polar Chemical Capacitor
4. △ marked : Solid Aluminium Chemical Capacitors
5. □ marked : Ceramic Capacitors

BK-7 (S/# 10001 ∿)
BK-7I (S/# 10001 ∿)
BK-7S (S/# 10001 ∿)

PS CIRCUIT BOARD AND WIRING

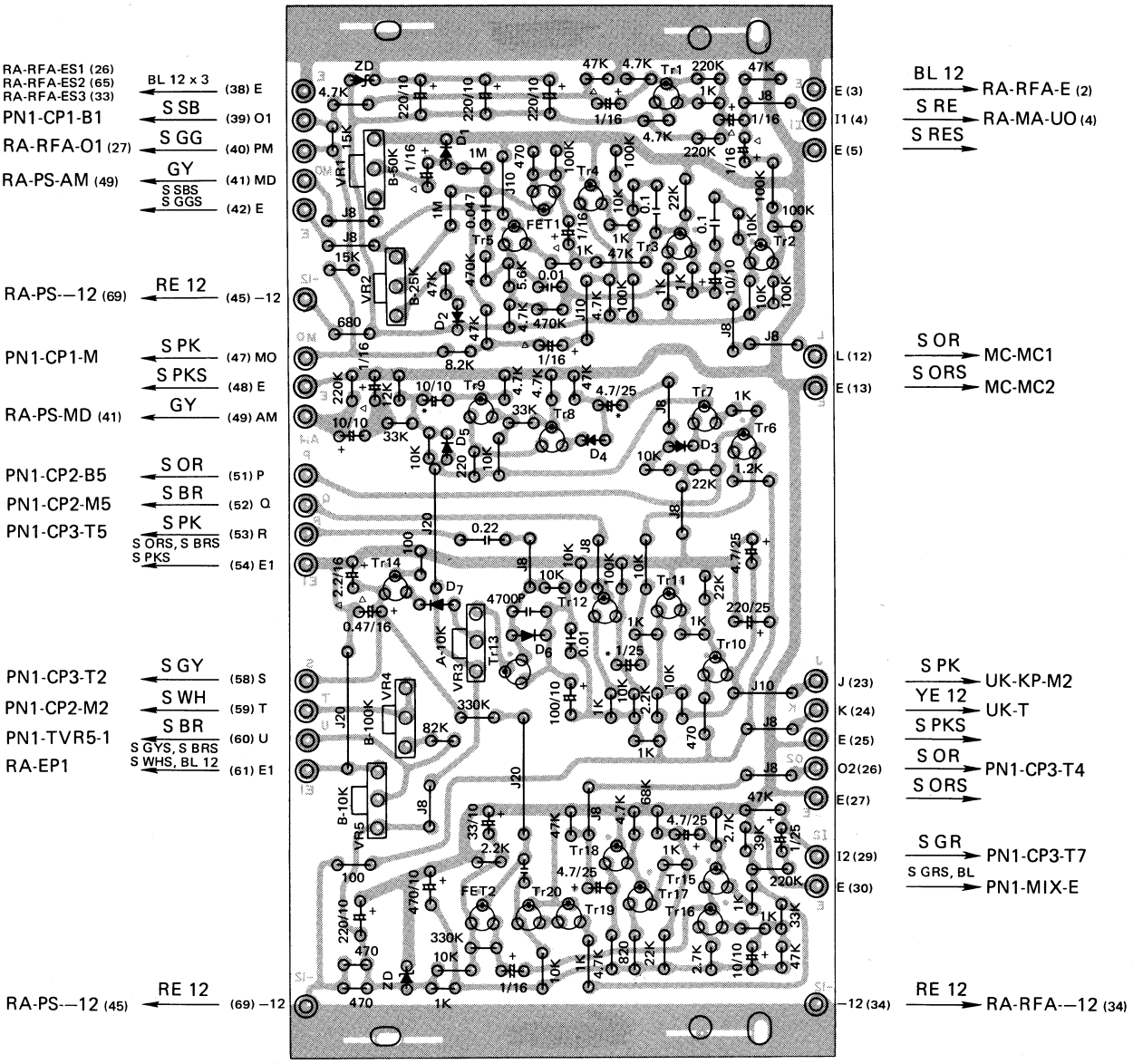

PS CIRCUIT BOARD AND WIRING

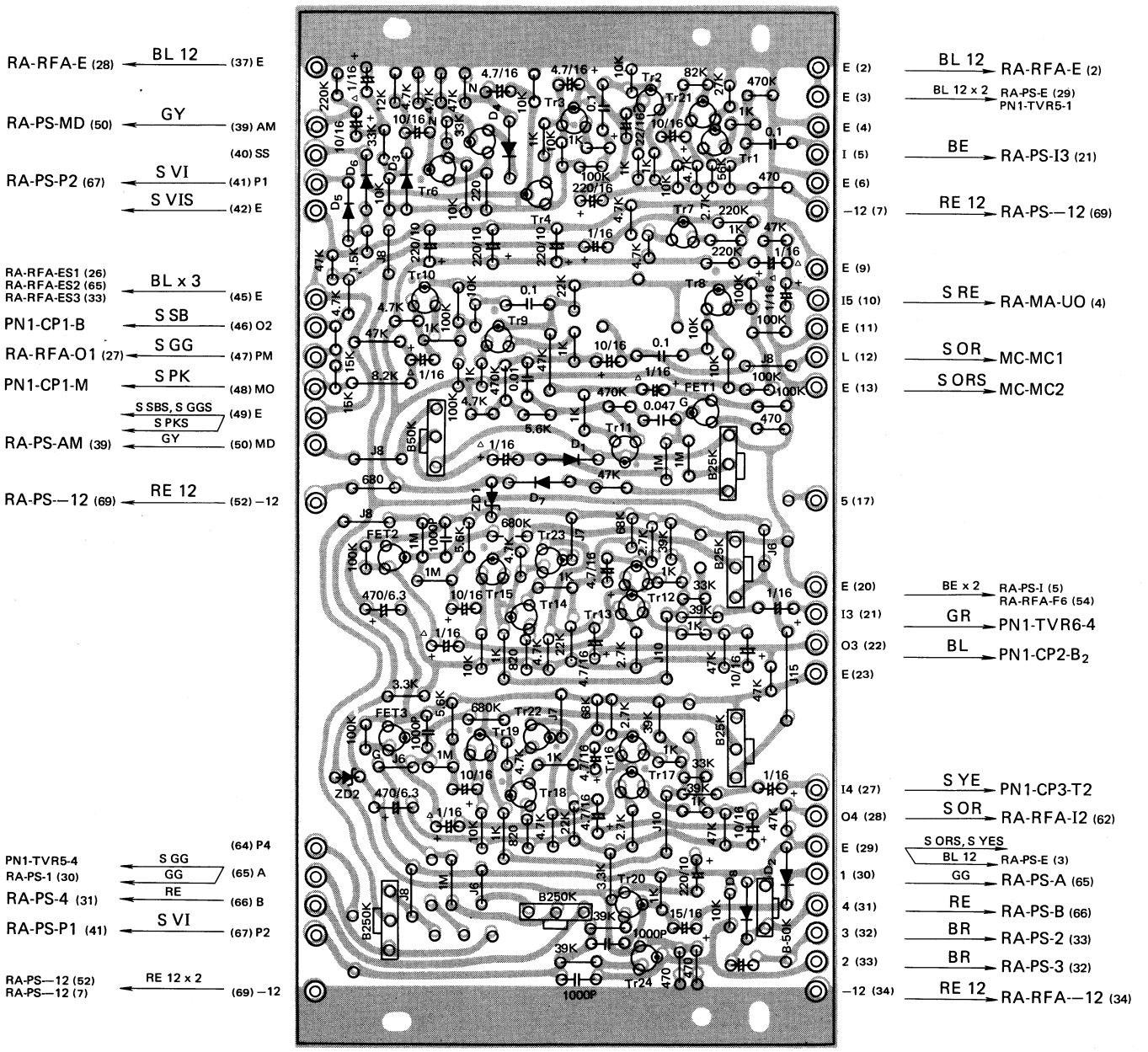

WIRING DIAGRAM

UPPER & LOWER MANUALS

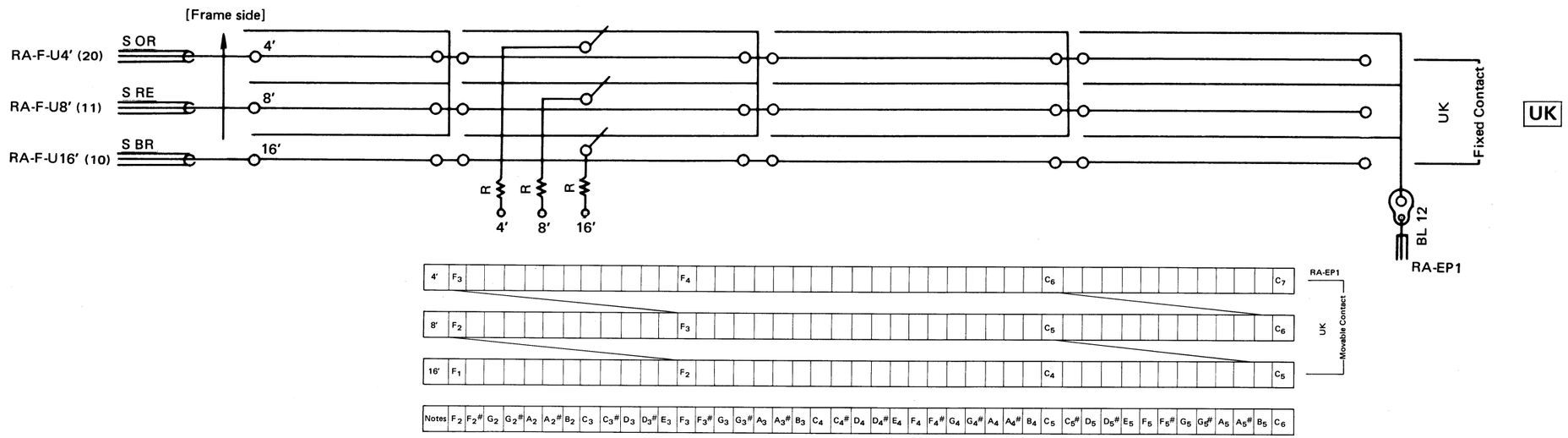

R	4′	100K			82K	68K
	8′	100K			82K	68K
	16′	180K	150K	120K	100K	

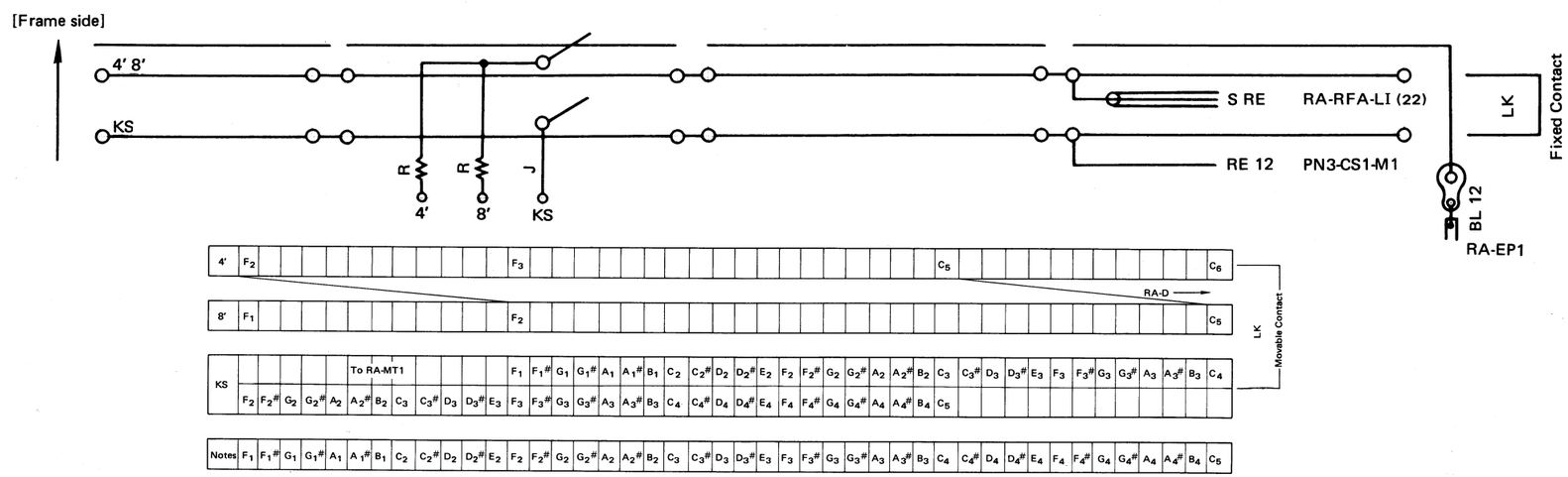

R	4′	330K	270K	220K	180K
	8′	150K	120K	100K	100K
	KS	J (Jamper Wire)			

WIRING DIAGRAM

UPPER & LOWER MANUALS

U K

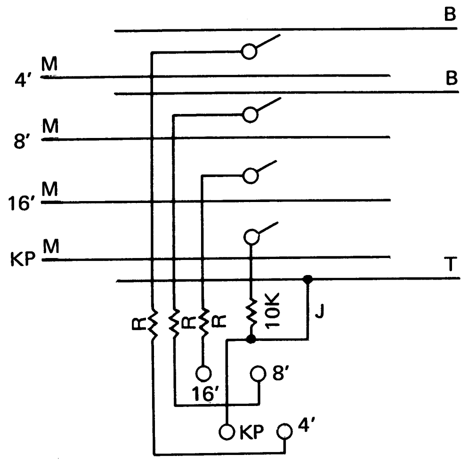

4'	UK-4'-M2	TP	1	2	TP	UK-4'-M1	UK-4'-M2	TP	3	4	TP	UK-4'-M3	UK-4'-M4	TP	5	6	TP	UK-4'-M5	UK-4'-M6	TP	7
					TP	UK-4'-M3	UK-4'-M4	TP			TP	UK-4'-M5	UK-4'-M6	TP			TP	UK-4'-M7			
					S OR	RA-F-U4'(20)															
8'	UK-8'-M2	TP	1	2	TP	UK-8'-M1	UK-8'-M2	TP	3	4	TP	UK-8'-M3	UK-8'-M4	TP	5	6	TP	UK-8'-M5	UK-8'-M6	TP	7
					TP	UK-8'-M3	UK-8'-M4	TP			TP	UK-8'-M5	UK-8'-M6	TP			TP	UK-8'-M7			
					S RE	RA-F-U8'(11)															
16'	UK-16'-M2	TP	1	2	TP	UK-16'-M1	UK-16'-M2	TP	3	4	TP	UK-16'-M3	UK-16'-M4	TP	5	6	TP	UK-16'-M5	UK-16'-M6	TP	7
					TP	UK-16'-M3	UK-16'-M5	TP			TP	UK-16'-M5	UK-16'-M6	TP			TP	UK-16'-M7			
					S BR	RA-F-U16'(10)															
KP	UK-KP-M2	TP	1	2	TP	UK-KP-M1	UK-KP-M2	TP	3	4	TP	UK-KP-M3	UK-KP-M4	TP	5	6	TP	UK-KP-M5	UK-KP-M6	TP	7
					TP	UK-KP-M3	UK-KP-M4	TP			TP	UK-KP-M5	UK-KP-M6	TP			TP	UK-KP-M7			
					S PK	RA-PS-J(23)															

UK

EP BL 12 RA-EP1

4'	F_3	$F\#_3$	G_3	$G\#_3$	A_3	$A\#_3$	B_3	C_4	$C\#_4$	D_4	$D\#_4$	E_4	F_4	$F\#_4$	G_4	$G\#_4$	A_4	$A\#_4$	B_4	C_5	$C\#_5$	D_5	$D\#_5$	E_5	F_5	$F\#_5$	G_5	$G\#_5$	A_5	$A\#_5$	B_5	C_6	$C\#_6$	D_6	$D\#_6$	E_6	F_6	$F\#_6$	G_6	$G\#_6$	A_6	$A\#_6$	B_6	C_7
8'	F_2	$F\#_2$	G_2	$G\#_2$	A_2	$A\#_2$	B_2	C_3	$C\#_3$	D_3	$D\#_3$	E_3	F_3	$F\#_3$	G_3	$G\#_3$	A_3	$A\#_3$	B_3	C_4	$C\#_4$	D_4	$D\#_4$	E_4	F_4	$F\#_4$	G_4	$G\#_4$	A_4	$A\#_4$	B_4	C_5	$C\#_5$	D_5	$D\#_5$	E_5	F_5	$F\#_5$	G_5	$G\#_5$	A_5	$A\#_5$	B_5	C_6
16'	F_1	$F\#_1$	G_1	$G\#_1$	A_1	$A\#_1$	B_1	C_2	$C\#_2$	D_2	$D\#_2$	E_2	F_2	$F\#_2$	G_2	$G\#_2$	A_2	$A\#_2$	B_2	C_3	$C\#_3$	D_3	$D\#_3$	E_3	F_3	$F\#_3$	G_3	$G\#_3$	A_3	$A\#_3$	B_3	C_4	$C\#_4$	D_4	$D\#_4$	E_4	F_4	$F\#_4$	G_4	$G\#_4$	A_4	$A\#_4$	B_4	C_5

UK

T — TP — TP — TP

YE 12 RA-PS-K (24)

Key name	F_2	$F\#_2$	G_2	$G\#_2$	A_2	$A\#_2$	B_2	C_3	$C\#_3$	D_3	$D\#_3$	E_3	F_3	$F\#_3$	G_3	$G\#_3$	A_3	$A\#_3$	B_3	C_4	$C\#_4$	D_4	$D\#_4$	E_4	F_4	$F\#_4$	G_4	$G\#_4$	A_4	$A\#_4$	B_4	C_5	$C\#_5$	D_5	$D\#_5$	E_5	F_5	$F\#_5$	G_5	$G\#_5$	A_5	$A\#_5$	B_5	C_6

R	4'	100K		82K	68K
	8'	100K		82K	68K
	16'	180K	150K	120K	100K
	KP	10K			

L K

4',8'	1	TP	LK-4',8'-M2	2	TP	LK-4',8'-M1	LK-4',8'-M2	TP	3	4	TP	LK-4',8'-M3	LK-4',8'-M4	TP	5	6	TP	LK-4',8'-M5	LK-4',8'-M6	TP	7
					TP	LK-4',8'-M3	LK-4',8'-M4	TP			TP	LK-4',8'-M5	LK-4',8'-M6	TP			TP	LK-4',8'-M7			
					S RE	RA-RFA-L1(22)															
KS	1	TP	LK-KS-M2	2	TP	LK-KS-M1	LK-KS-M2	TP	3	4	TP	LK-KS-M3	LK-KS-M4	TP	5	6	TP	LK-KS-M5	LK-KS-M6	TP	7
					TP	LK-KS-M3	LK-KS-M4	TP			TP	LK-KS-M5	LK-KS-M6	TP			TP	LK-KS-M7			
					RE 12	PN3-CS1-M1															

LK

EP BL 12 RA-EP1

4'	F_2	$F\#_2$	G_2	$G\#_2$	A_2	$A\#_2$	B_2	C_3	$C\#_3$	D_3	$D\#_3$	E_3	F_3	$F\#_3$	G_3	$G\#_3$	A_3	$A\#_3$	B_3	C_4	$C\#_4$	D_4	$D\#_4$	E_4	F_4	$F\#_4$	G_4	$G\#_4$	A_4	$A\#_4$	B_4	C_5	$C\#_5$	D_5	$D\#_5$	E_5	F_5	$F\#_5$	G_5	$G\#_5$	A_5	$A\#_5$	B_5	C_6

To RA - D →

8'	F_1	$F\#_1$	G_1	$G\#_1$	A_1	$A\#_1$	B_1	C_2	$C\#_2$	D_2	$D\#_2$	E_2	F_2	$F\#_2$	G_2	$G\#_2$	A_2	$A\#_2$	B_2	C_3	$C\#_3$	D_3	$D\#_3$	E_3	F_3	$F\#_3$	G_3	$G\#_3$	A_3	$A\#_3$	B_3	C_4	$C\#_4$	D_4	$D\#_4$	E_4	F_4	$F\#_4$	G_4	$G\#_4$	A_4	$A\#_4$	B_4	C_5
KS	TO RA - MTI												F_1	$F\#_1$	G_1	$G\#_1$	A_1	$A\#_1$	B_1	C_2	$C\#_2$	D_2	$D\#_2$	E_2	F_2	$F\#_2$	G_2	$G\#_2$	A_2	$A\#_2$	B_2	C_3	$C\#_3$	D_3	$D\#_3$	E_3	F_3	$F\#_3$	G_3	$G\#_3$	A_3	$A\#_3$	B_3	C_4
Key name	F_2	$F\#_2$	G_2	$G\#_2$	A_2	$A\#_2$	B_2	C_3	$C\#_3$	D_3	$D\#_3$	E_3	F_3	$F\#_3$	G_3	$G\#_3$	A_3	$A\#_3$	B_3	C_4	$C\#_4$	D_4	$D\#_4$	E_4	F_4	$F\#_4$	G_4	$G\#_4$	A_4	$A\#_4$	B_4	C_5	C_5	D_5	D_5	E_5								

LK

Key name	F_1	$F\#_1$	G_1	$G\#_1$	A_1	$A\#_1$	B_1	C_2	$C\#_2$	D_2	$D\#_2$	E_2	F_2	$F\#_2$	G_2	$G\#_2$	A_2	$A\#_2$	B_2	C_3	$C\#_3$	D_3	$D\#_3$	E_3	F_3	$F\#_3$	G_3	$G\#_3$	A_3	$A\#_3$	B_3	C_4	$C\#_4$	D_4	$D\#_4$	E_4	F_4	$F\#_4$	G_4	$G\#_4$	A_4	$A\#_4$	B_4	C_5

R	4'	330K	270K	220K	180K
	8'	150K	120K	100K	100K
	KS				

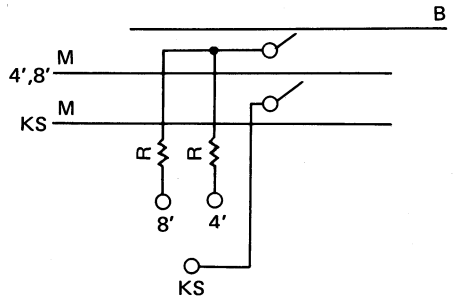

WIRING DIAGRAM

PEDALS

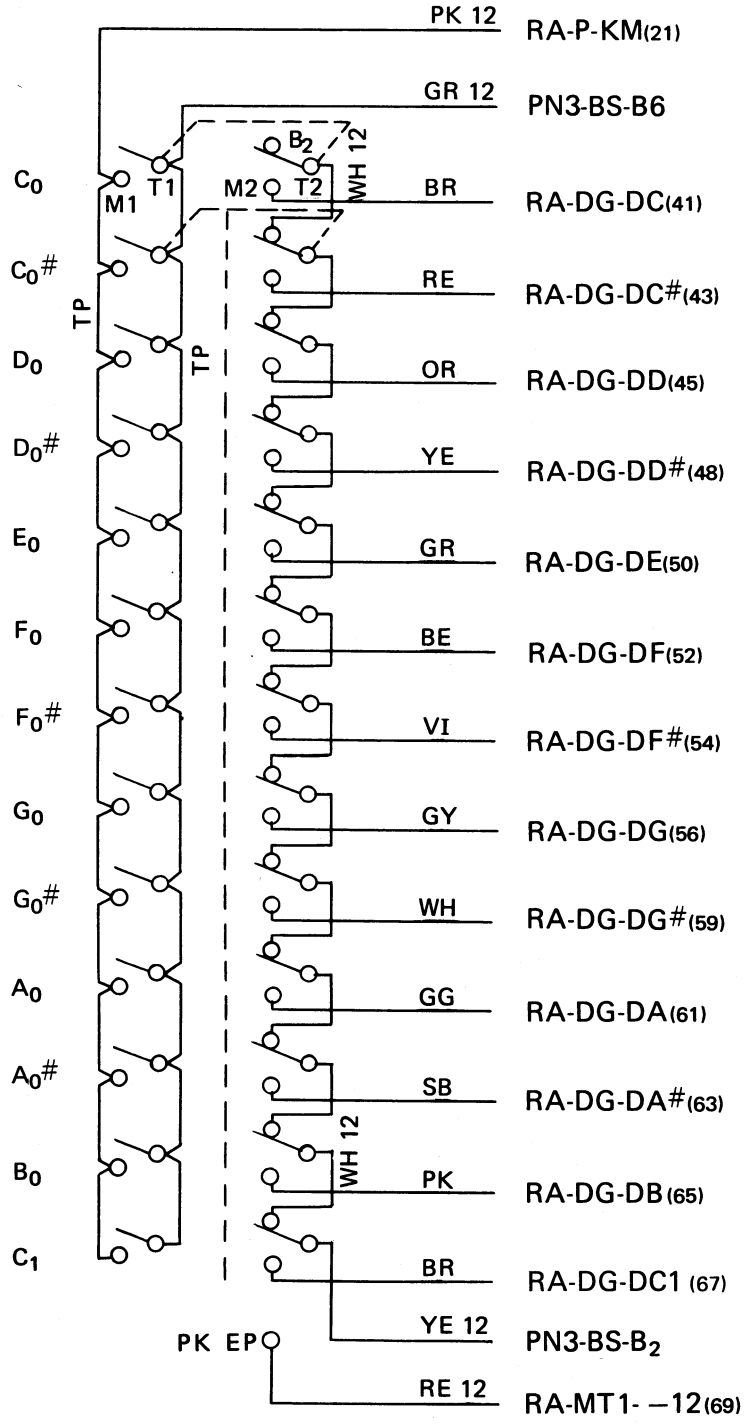

WIRING DIAGRAM

PANEL 1

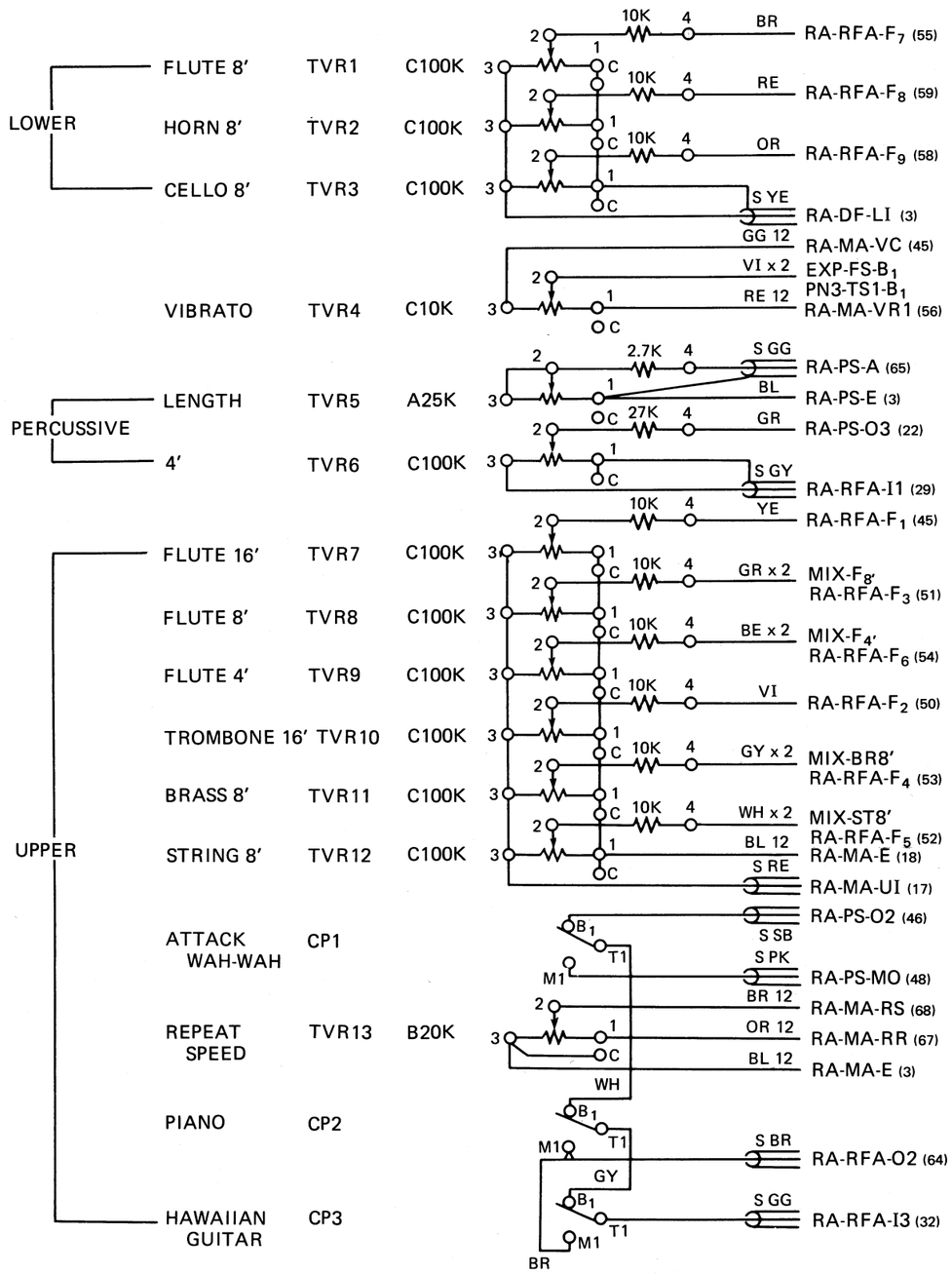

KEP-NA02566-29

KEC-2572-28

WIRING DIAGRAM

PANEL 1

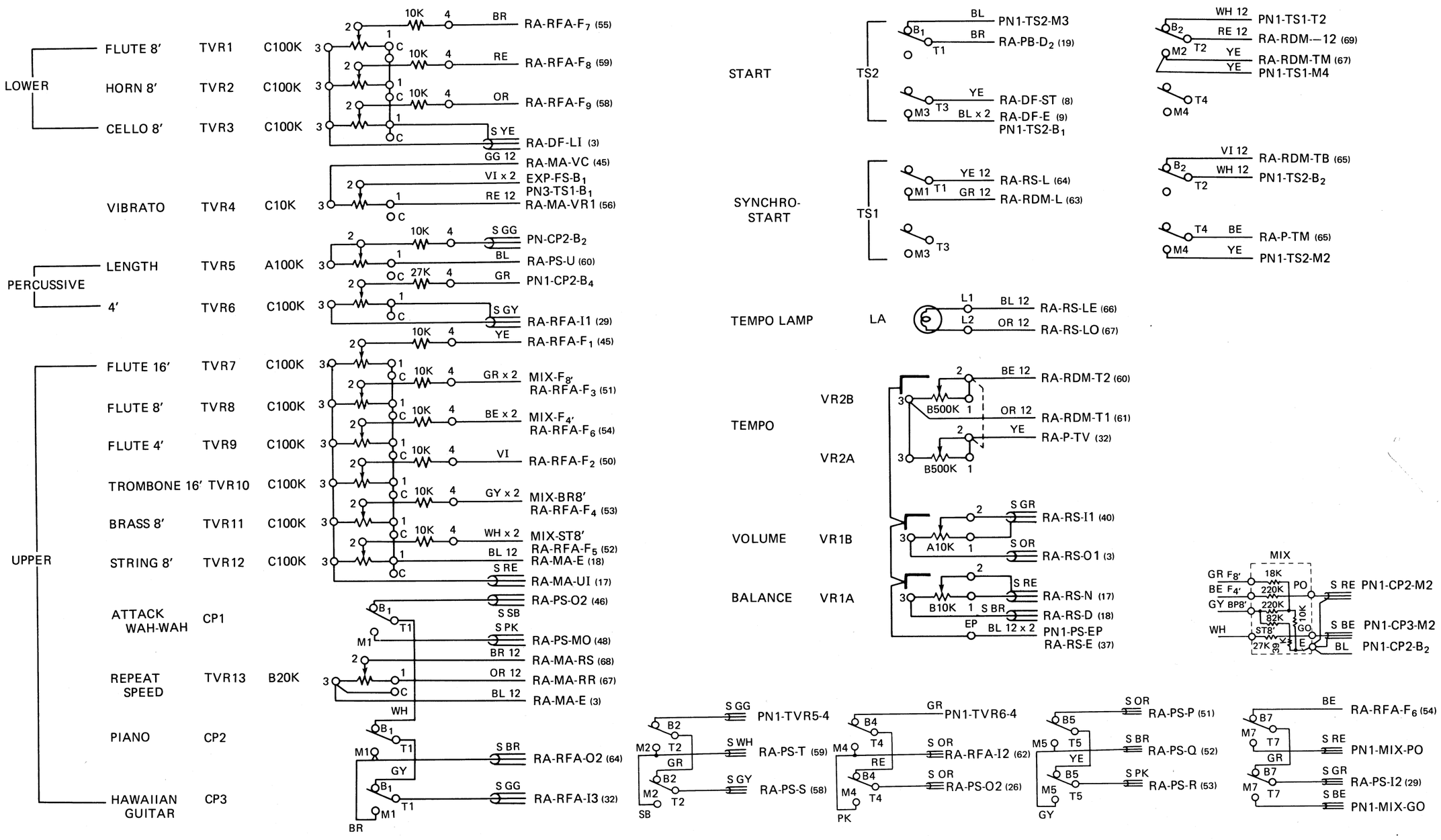

WIRING DIAGRAM

RHYTHM SWITCH-PANEL 1

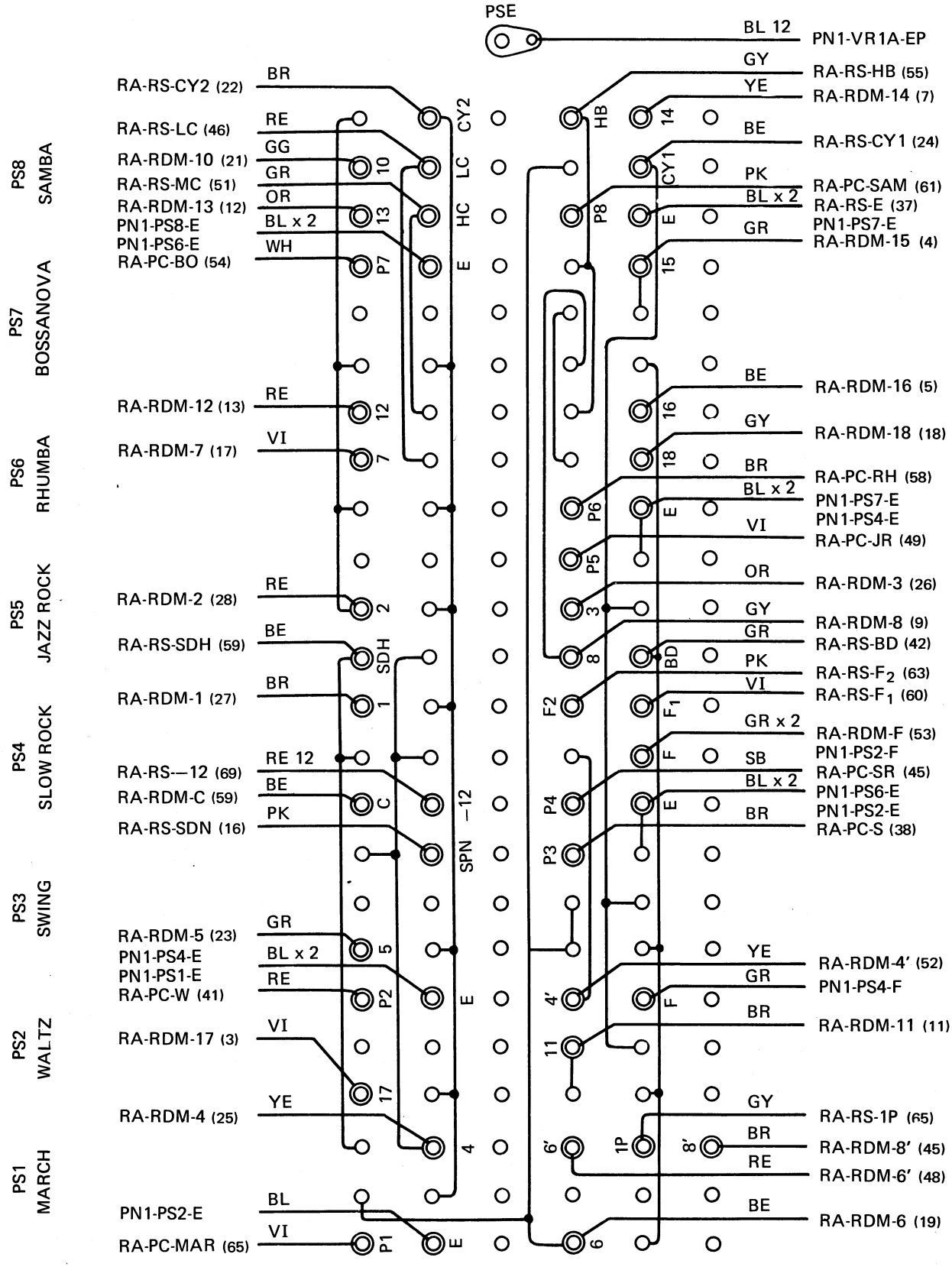

BK-7 (S/# 1001 ∿)
BK-7I (S/# 1001 ∿)
BK-7S (S/# 1001 ∿)

WIRING DIAGRAM

PANEL 2, EXP. PEDAL, FOOT SWITCH, US SOCKET, REVERB UNIT & NEON LAMP

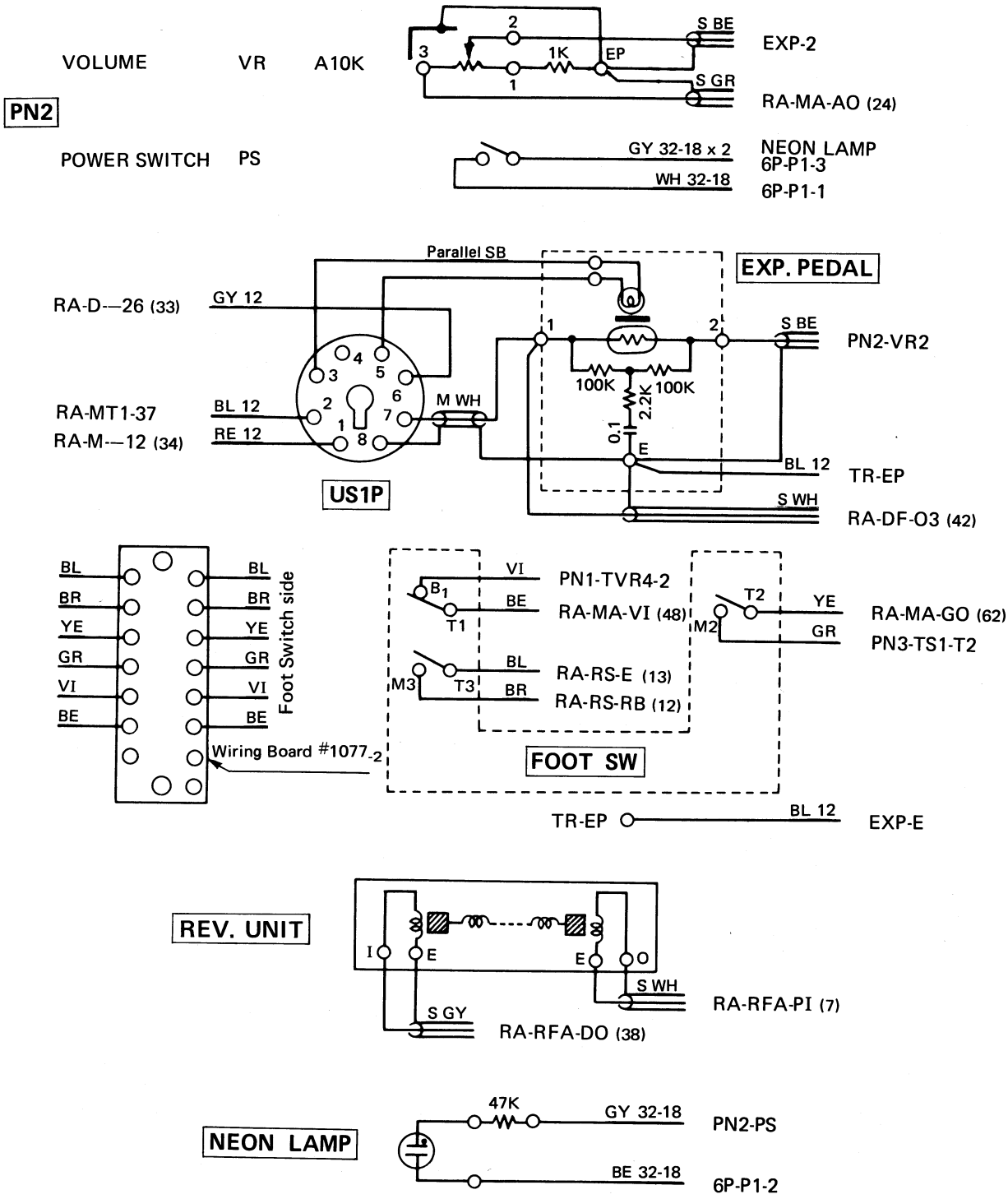

WIRING DIAGRAM

PANEL 3

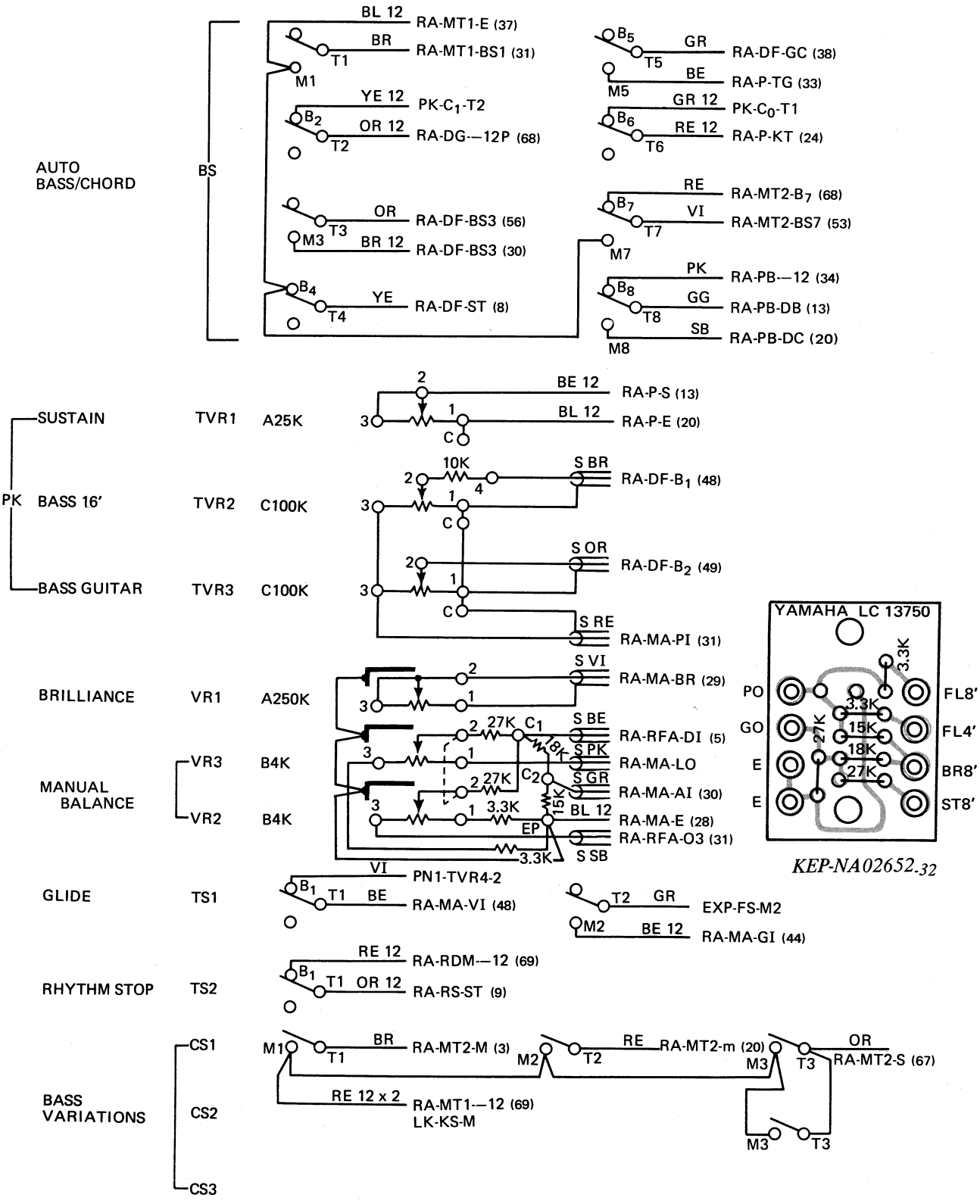

KEC-2575-28

WIRING DIAGRAM

PANEL 4, PANEL 5 & NETWORK RESISTOR

PN4

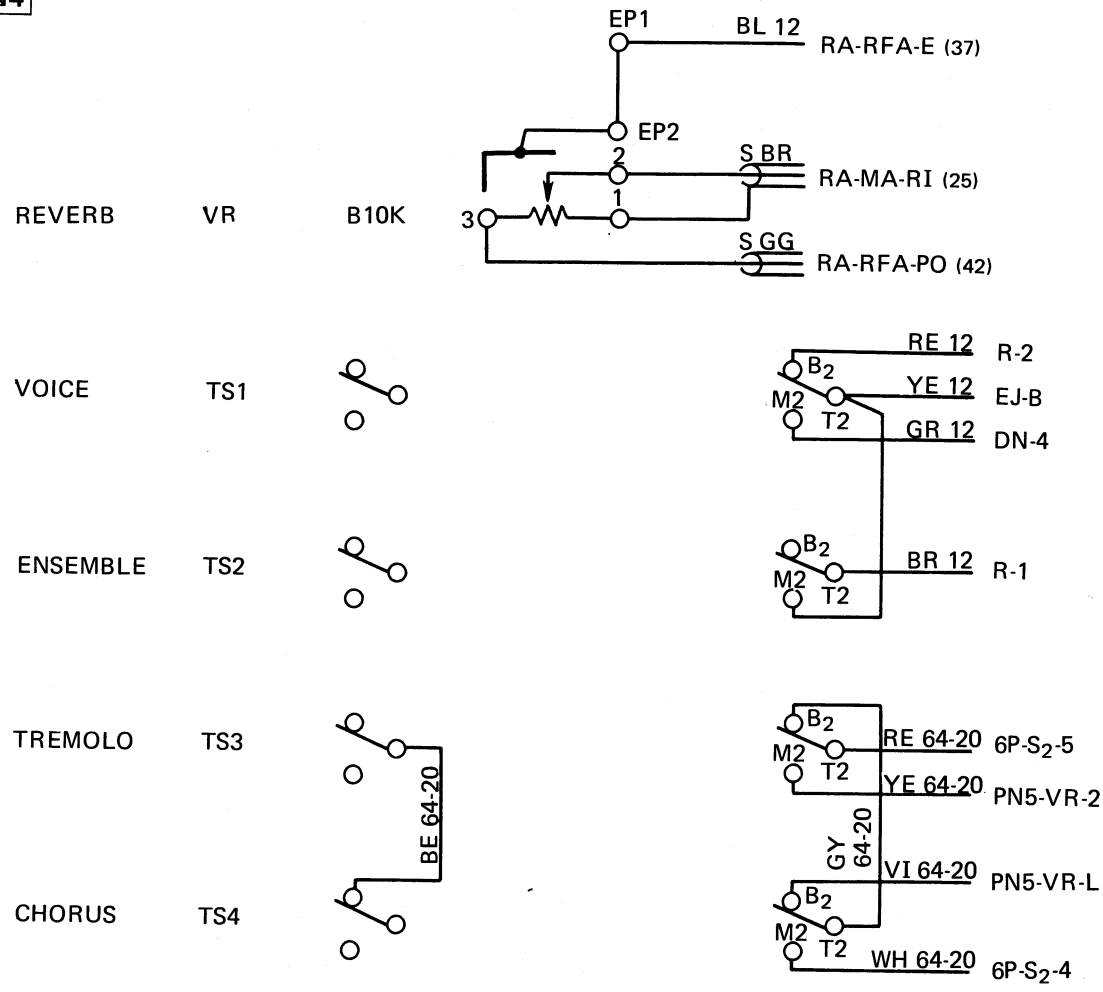

PN5

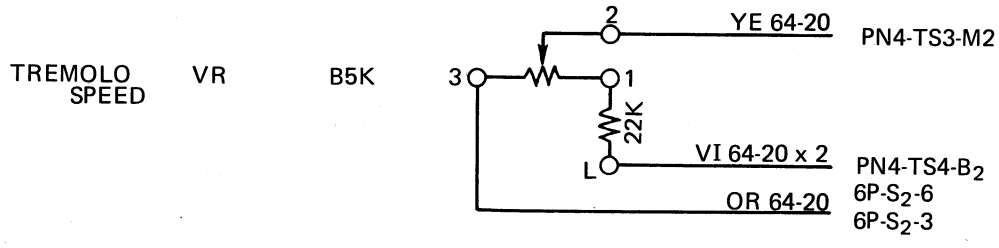

NETWORK RESISTOR

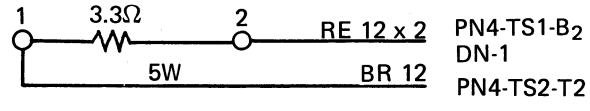

WIRING DIAGRAM

COIL UNIT – KEY BED

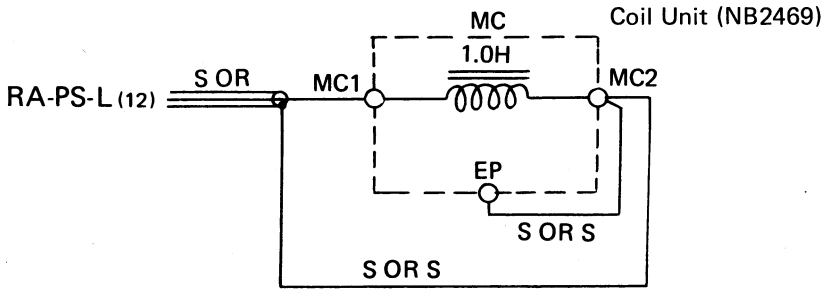

Key Bed

WIRING DIAGRAM

TREMOLO UNIT, SPEAKER, HEADPHONE JACK, DIVIDING NETWORK & TREMOLO STEP-DOWN TRANSFORMER

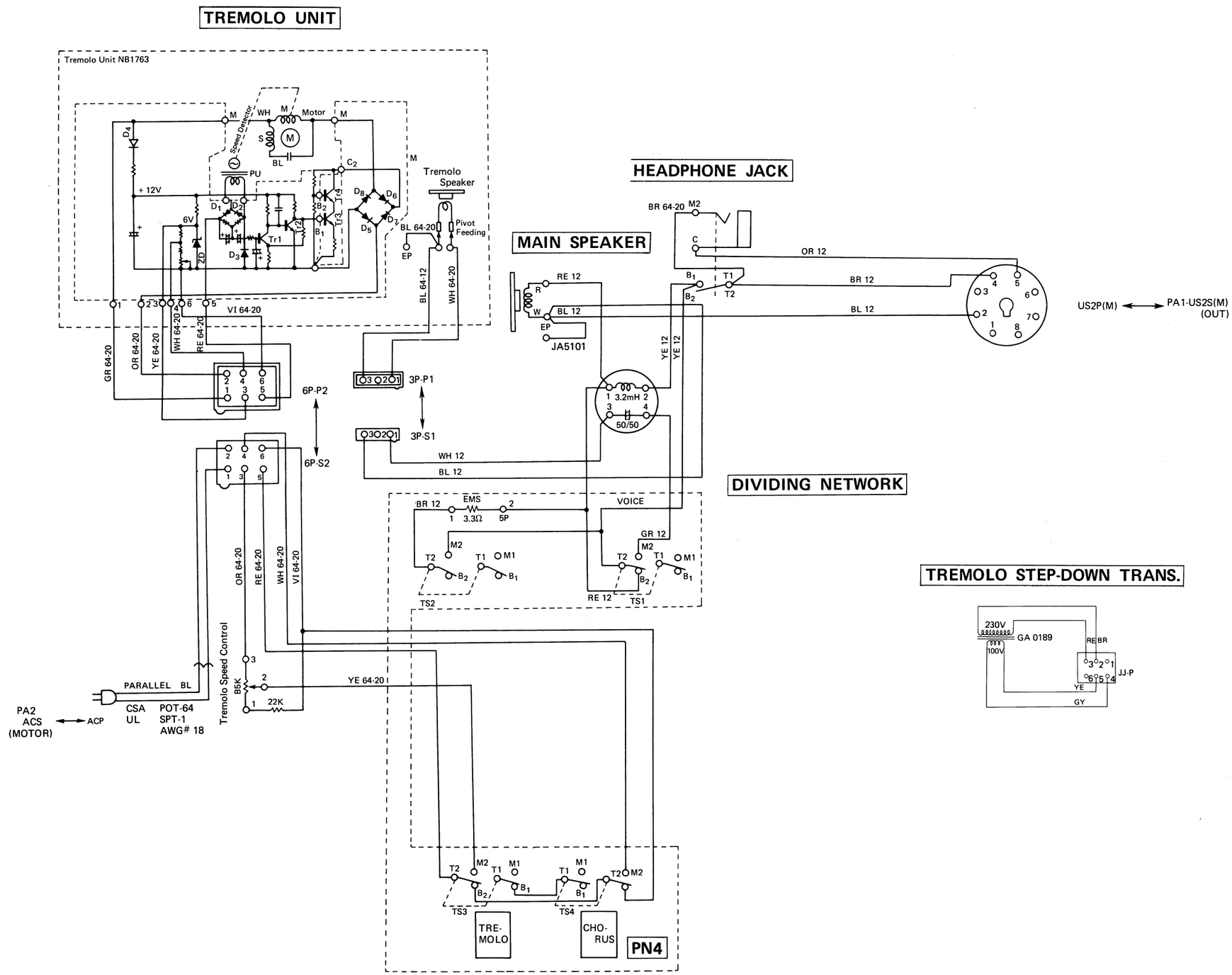

WIRING DIAGRAM

TREM. SP. EJ. DN

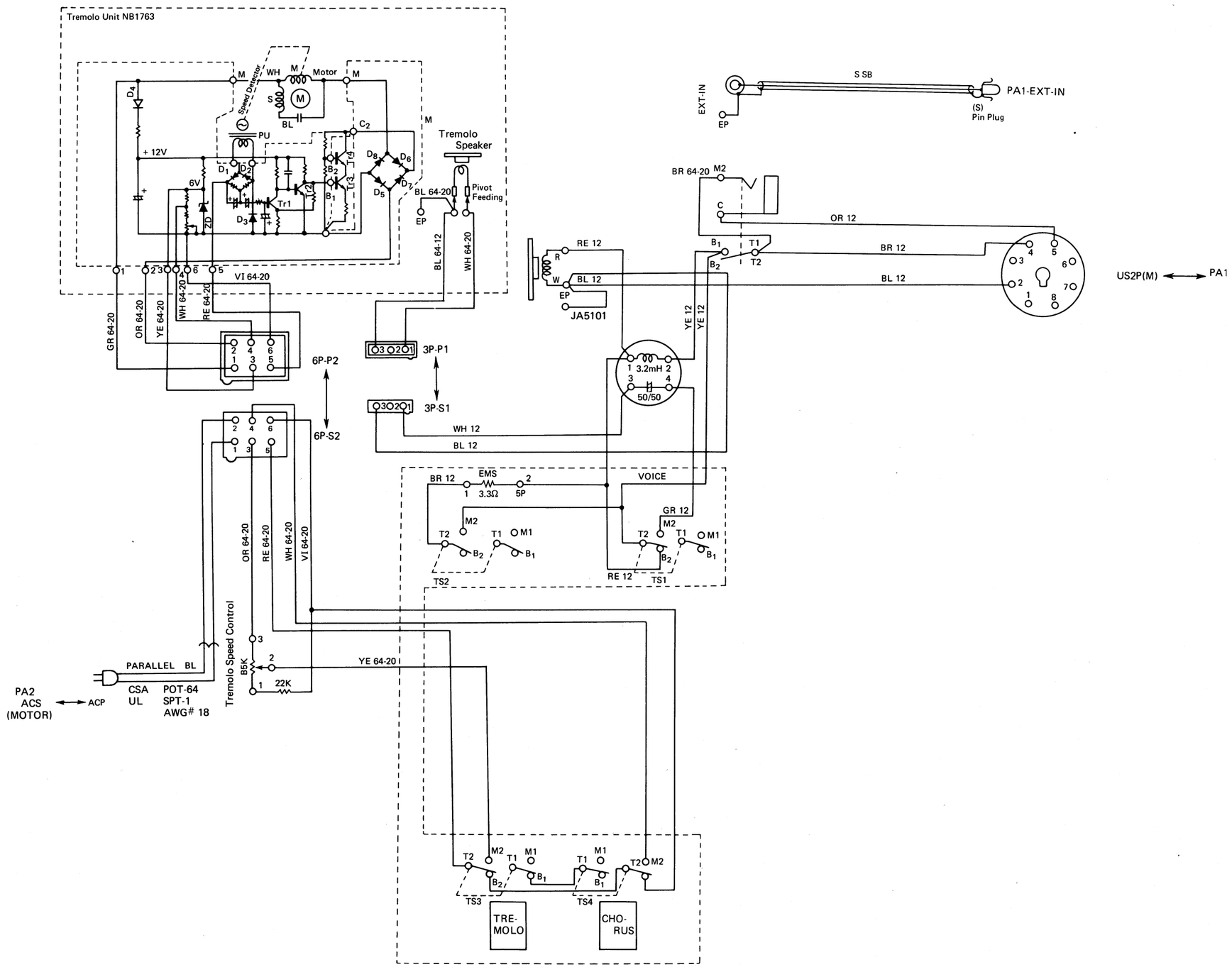

MAIN AMPLIFIER CIRCUIT DIAGRAM (ND3022B)

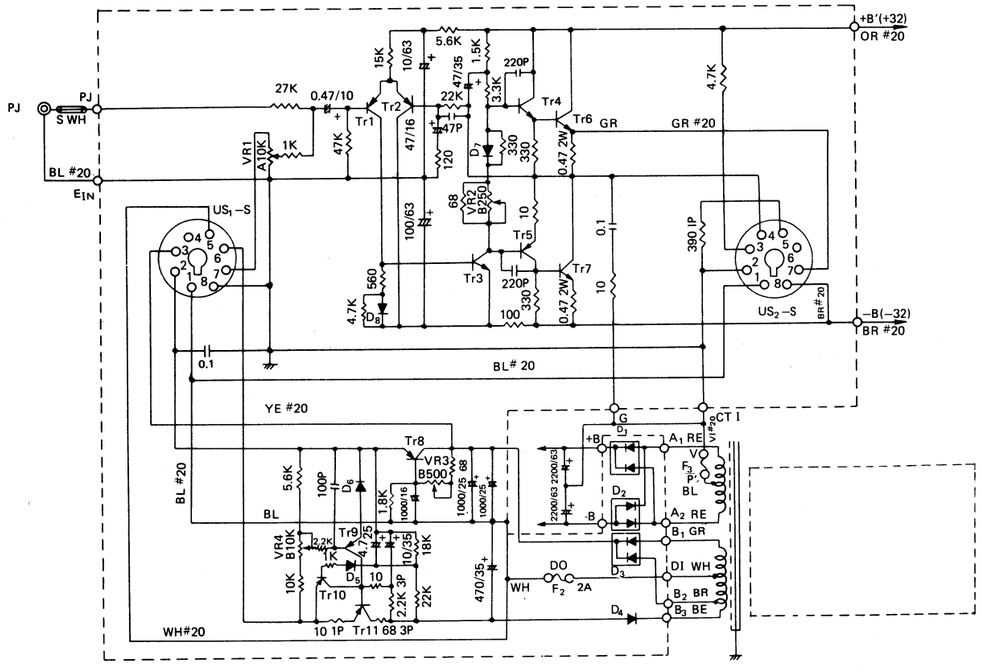

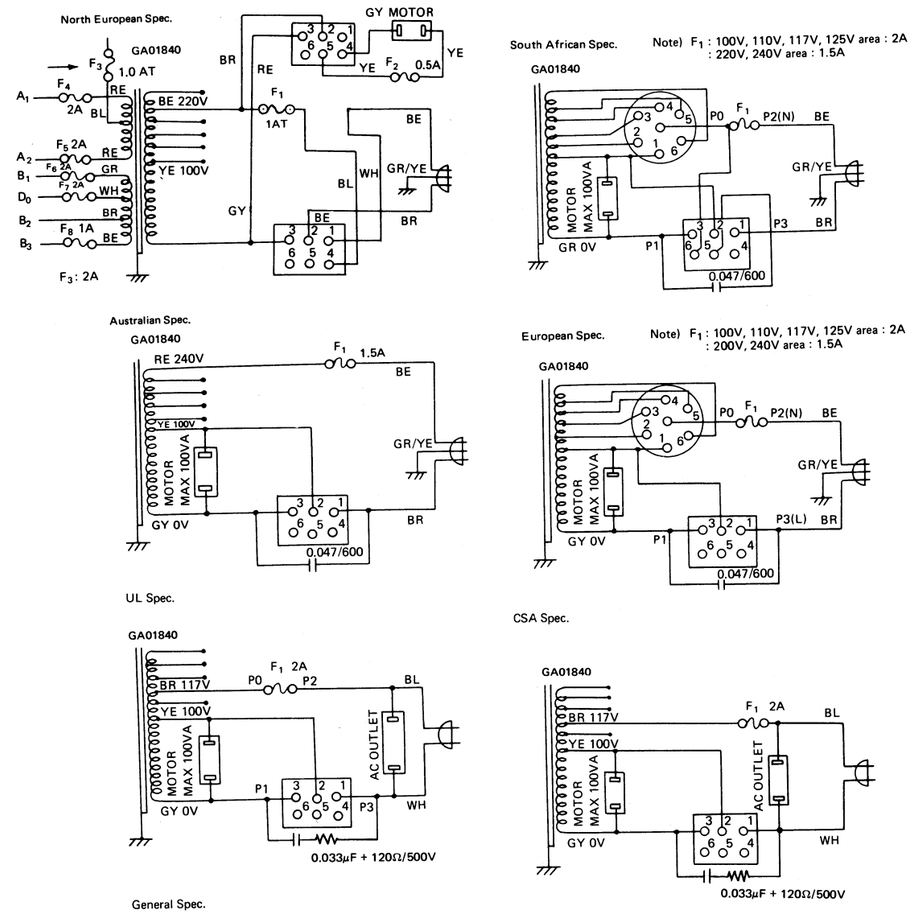

Notes) 1. Transistors

Tr1, Tr2	: 2SA672
Tr9, Tr10	: 2SA561(O) or (Y)
Tr3	: 2SC708A(B)
Tr4	: 2SC485(Y)
Tr5	: 2SA485(Y)
Tr6, Tr7	: 2SC1030(A) or (B) or (C)
Tr8	: 2SD256
Tr11	: 2SA537(A) or (B) or (C)

2. Diodes

D_1, D_3	: 10DC-2
D_2	: 10DC-2R
D_4	: 10D-2
D_5, D_8	: 1S1555
D_6	: 1S1715 (Zener)
D_7	: STV-3 (Varistor)

3. Capacitors
△ : Solid Aluminum Capacitor

4. Pair transistors Tr1 Tr2, Tr4 Tr5 and Tr6 Tr7 must be in the same classifications of hFEs.

Parts List
(For Revised Parts)

Ref. No.	Parts No.	Parts Name/Discription	Service Parts
	NA 01927	D Circuit Board # 10502	
	NA 02276	RDM Circuit Board # 12373	BK-4 · RDM
	NA 02833	RFA Circuit Board # 13183	
	NA 02831	PS Circuit Board # 16161	
	NA 02566	MIX Circuit Board	
	NB 03236	Upper Manual Keyboard (metal contact)	
	NB 03237	Key Switch 1U (metal contact)	
	NB 03238	– do. – 2U (– do. –)	
	NB 03239	– do. – 3U (– do. –)	
	NB 03240	– do. – 4U (– do. –)	

AUTO RHYTHM SECTION SCHEMATIC DIAGRAM

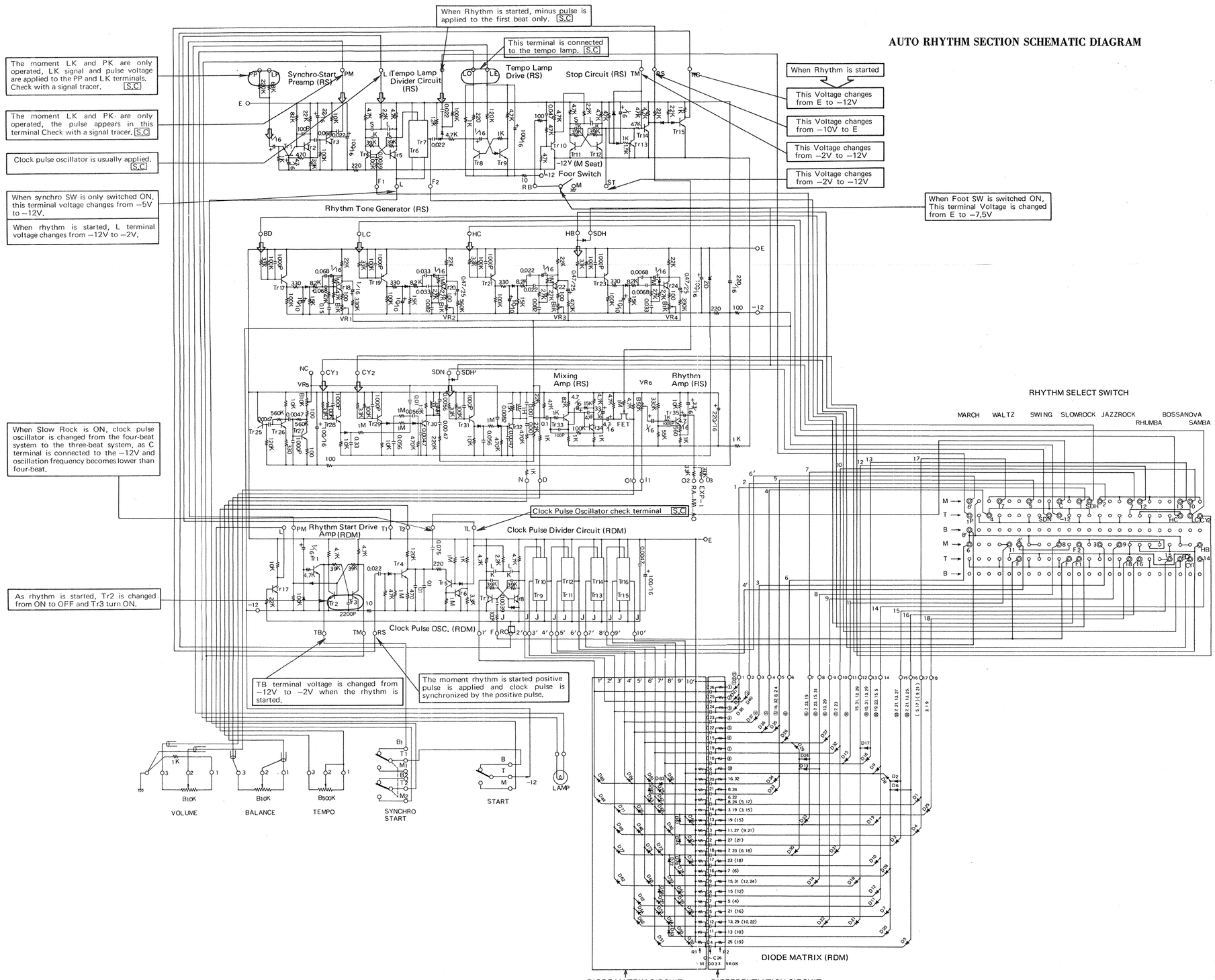

OVERALL SCHEMATIC DIAGRAM

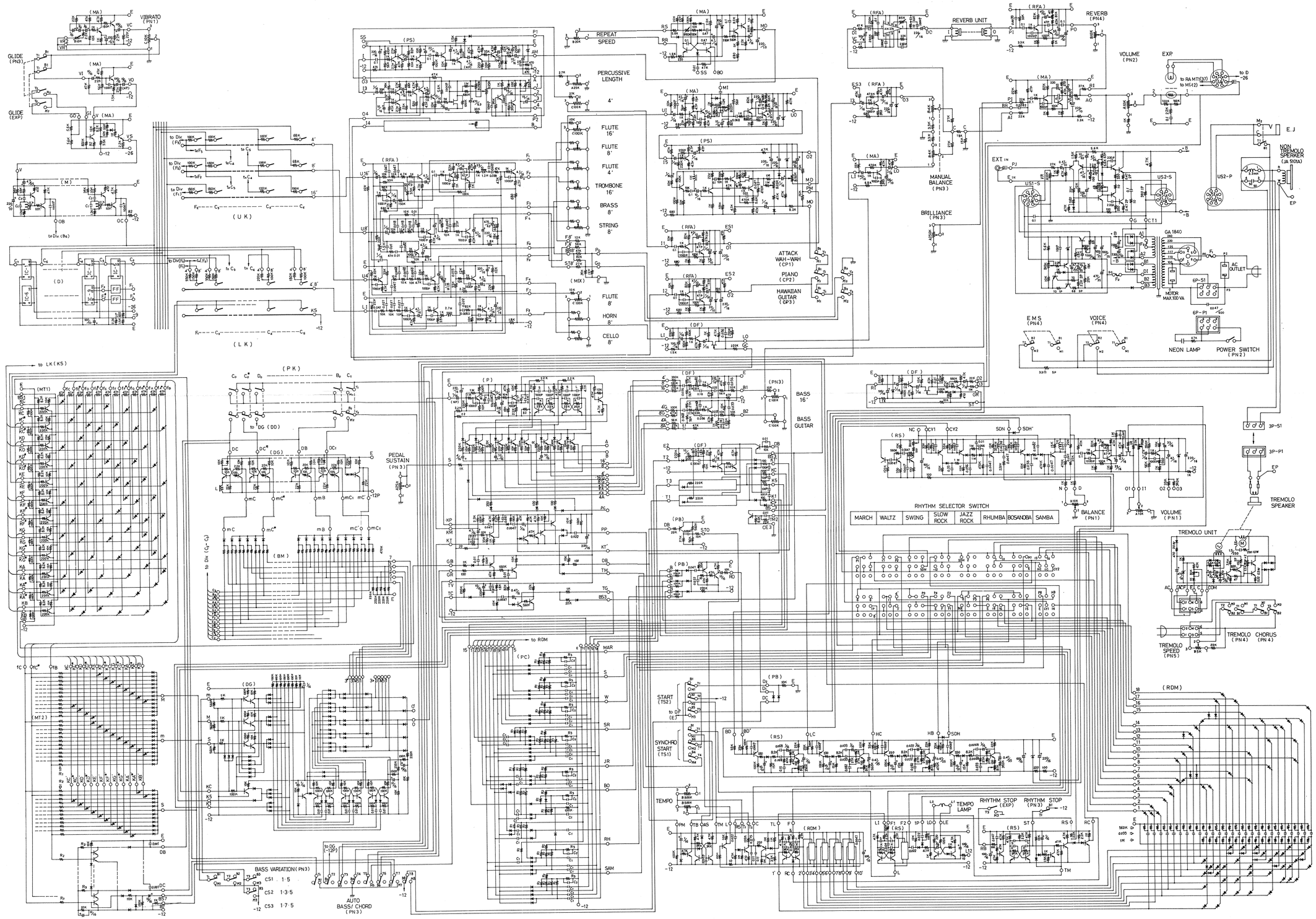

SINCE 1887 YAMAHA

NIPPON GAKKI CO., LTD.

ESM-18 3212 BK-7 Series S.N. Ⓘ Printed in Japan.